UK EUROCODES

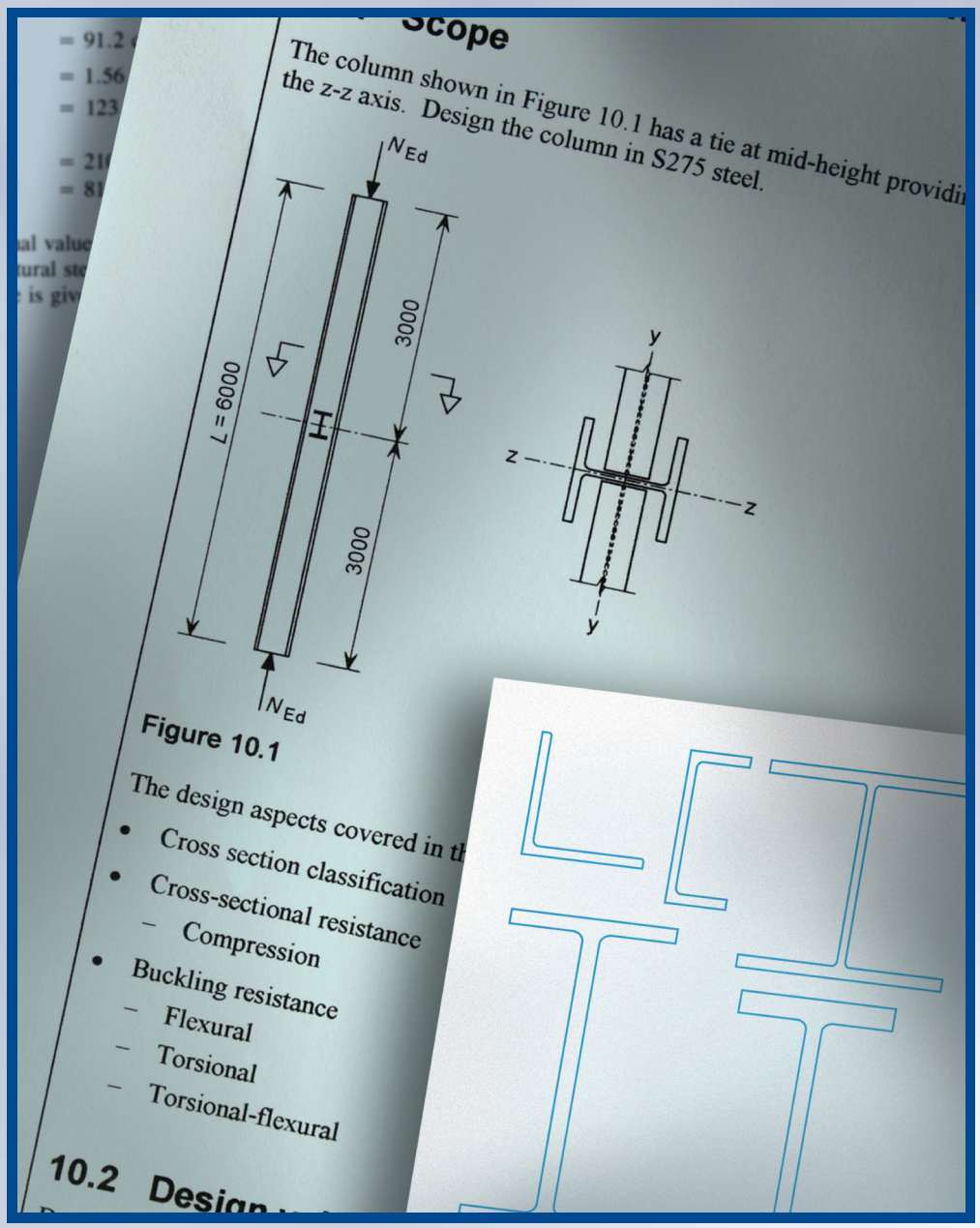

SCI Steel Knowledge

TATA STEEL

BCSA

Steel Building Design:

Worked Examples – Open Sections

Steel Knowledge

SCI (The Steel Construction Institute) is the leading, independent provider of technical expertise and disseminator of best practice to the steel construction sector. We work in partnership with clients, members and industry peers to help build businesses and provide competitive advantage through the commercial application of our knowledge. We are committed to offering and promoting sustainable and environmentally responsible solutions

Our service spans the following five areas:

Membership
Individual and corporate membership

Technical information
Courses
Publications
Online reference tools

Education
Codes and standards

Construction solutions
Sustainability
Product development
Research
Engineering solutions

Communications technology
Websites

Communities
Design tools

Assessment
SCI assessed

The Steel Construction Institute, Silwood Park, Ascot, Berkshire, SL5 7QN.
Telephone: +44 (0) 1344 636525 Fax: +44 (0) 1344 636570
Email: membership@steel-sci.com

For information on publications, telephone direct: +44 (0) 1344 636513
or Email: publications@steel-sci.com

For information on courses, telephone direct: +44 (0) 1344 636500
or Email: education@steel-sci.com

World Wide Web site: www.steel-sci.org
24 X 7 technical information: www.steelbiz.org

SCI PUBLICATION P364

Steel Building Design:
Worked Examples - Open Sections

In accordance with Eurocodes and the UK National Annexes

M E Brettle BEng (Hons)

Published by:
The Steel Construction Institute
Silwood Park
Ascot
Berkshire SL5 7QN

Tel:01344 636525
Fax:01344 636570

© 2009The Steel Construction Institute

Apart from any fair dealing for the purposes of research or private study or criticism or review, as permitted under the Copyright Designs and Patents Act, 1988, this publication may not be reproduced, stored or transmitted, in any form or by any means, without the prior permission in writing of the publishers, or in the case of reprographic reproduction only in accordance with the terms of the licences issued by the UK Copyright Licensing Agency, or in accordance with the terms of licences issued by the appropriate Reproduction Rights Organisation outside the UK.

Enquiries concerning reproduction outside the terms stated here should be sent to the publishers, The Steel Construction Institute, at the address given on the title page.

Although care has been taken to ensure, to the best of our knowledge, that all data and information contained herein are accurate to the extent that they relate to either matters of fact or accepted practice or matters of opinion at the time of publication, The Steel Construction Institute, the authors and the reviewers assume no responsibility for any errors in or misinterpretations of such data and/or information or any loss or damage arising from or related to their use.

Publications supplied to the Members of the Institute at a discount are not for resale by them.

Publication Number: SCI P364

ISBN 978-1-85942-183-3

British Library Cataloguing-in-Publication Data.

A catalogue record for this book is available from the British Library.

FOREWORD

The design of steel framed buildings in the UK, has, since 1990, generally been in accordance with the British Standard BS 5950-1. However, that Standard is due to be withdrawn in March 2010; it will be replaced by the corresponding Parts of the Structural Eurocodes.

The Eurocodes are a set of structural design standards, developed by CEN (European Committee for Standardisation) over the last 30 years, to cover the design of all types of structures in steel, concrete, timber, masonry and aluminium. In the UK, they are published by BSI under the designations BS EN 1990 to BS EN 1999; each of these ten Eurocodes is published in several Parts and each Part is accompanied by a National Annex that implements the CEN document and adds certain UK-specific provisions.

This publication is one of a number of new design guides that are being produced by SCI to help designers become acquainted with the use of the Eurocodes for structural steel design. It provides a number of short examples, in the form of calculation sheets, illustrating the design of structural open section members and simple connections in buildings.

The examples were prepared by Miss M E Brettle (SCI) and Mr A L Smith (SCI). The examples were checked by Mr D G Brown (SCI) and Dr S J Hicks (formerly of SCI).

The work leading to this publication was funded by Tata Steel* and their support is gratefully acknowledged.

* This publication includes references to Corus, which is a former name of Tata Steel in Europe

Contents

	Page No.
FOREWORD	iii
SUMMARY	vi
INTRODUCTION	1
WORKED EXAMPLES	
1. Choosing a steel sub-grade	3
2. Simply supported laterally restrained beam	9
3. Unrestrained beam with end bending moments	20
4. Simply supported beam with lateral restraint at load application points	30
5. Unrestrained beam with end bending moments using a Class 3 section	41
6. Beam under combined bending and torsion - Simple method	50
7. Continuous beam designed elastically	62
8. Simply supported composite beam	76
9. Pinned column using Class 3 section	96
10. Pinned column with intermediate restraints	103
11. Biaxial bending and compression of a Class 1/2 section	111
12. Major axis bending and compression of a Class 3 section	125
13. Column in simple construction	139
14. End plate beam to column flange connection	150
15. Fin plate beam to column flange connection	159
16. Column splice - Bearing	170
17. Column splice - Non bearing	181
18. Column splice - Non bearing (Net tension)	195
19. Base plate - Nominally pinned	201
20. Base plate - Column with moment	207
REFERENCES	215

SUMMARY

This publication presents 20 design examples to illustrate the use of Eurocodes 3 and 4 for the design of structural open section members and connections. The examples all use the Nationally Determined Parameter values recommended in the UK National Annexes.

A brief introductory section precedes the examples and a bibliography section is given at the end.

INTRODUCTION

This publication presents twenty design examples to illustrate the use of Eurocodes 3 and 4 for the design of structural open section members and connections. The examples all use the Nationally Determined Parameter values recommended in the UK National Annexes.

While preparing the examples for this publication, the emphasis has been to illustrate the design process in accordance with the Eurocodes and not necessarily to reproduce practical situations. Other solutions may be equally acceptable to those given. No consideration has been given to the influence of factors related to erection and fabrication; the consideration of these factors and the standardisation of sizes may well lead to solutions with better overall economy than those given.

All the design examples assume the use of either S275 or S355 steel that complies with EN 10025-2.

In addition to the design of simple structural members, examples are included for simple connections used in buildings. Design guidance for simple connections will be given in SCI publication P358 *Joints in steel construction: Simple connection in accordance with* Eurocode *3(due to be published in 2010)*.

Where a reference is made to P363 or the "*Blue Book*" this refers to *Steel building design: Design data. In accordance with the Eurocodes and the UK National* Annexes.

In the examples, references are made to Eurocode Parts and to product standards. The Eurocode Parts and most of the product standards were prepared initially by CEN and all their internal references are made using the 'EN' designations. However, all these standards are published in the UK under a 'BS EN' designation; that designation has been used.

References to clauses introduced in the National Annex are distinguished by their NA prefix, for example, as NA.2.3.

Unless otherwise stated, the clause and table numbers given in the right-hand margin of the worked examples refer to the Eurocode Part specified at the start of each example.

Reference is made in some design examples to non-contradictory complementary information (NCCI). Such information might provide additional guidance to designers but care must be taken not to use any guidance that would conflict with the Eurocodes.

One instance where NCCI is needed is in determining the non-dimensional slenderness $\bar{\lambda}_{LT}$ for lateral torsional buckling, which EN 1993-1-1 states may be derived from the elastic critical moment M_{cr}, although no method is given for determining the value of M_{cr}. Sources of NCCI for M_{cr} include:

- Formulae in text books
- Software, such as '*LTBeam*' (available from the CTICM website)

Alternatively, a conservative simplified method for determining $\bar{\lambda}_{LT}$ directly is given in SCI publication P362 *Steel building design: Concise Eurocodes*.

References are to BS EN 1993-1-10: 2005 including its National Annex Unless otherwise stated.

1 Choosing a steel sub-grade

1.1 Scope

An exposed steel structure is proposed with:

- S355 steel to BS EN 10025-2:2004
- the beams welded to the column flange, as shown in Figure 1.1
- the elements are hot rolled sections and the thickest parts are 31.4 mm (column flange) and 19.6 mm (beam flange)
- the maximum tensile stress in the beam flange of 175 N/mm^2
- there is no tensile stress in the column.

Choose appropriate sub grades to avoid brittle fracture.

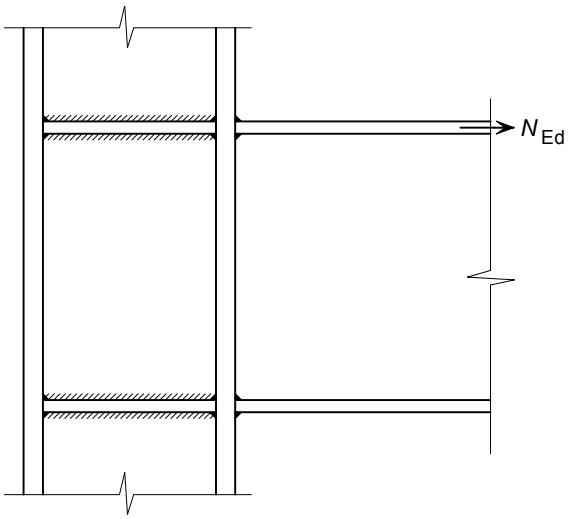

Figure 1.1

BS EN 1993-1-10 presents a table with limiting thicknesses for different steel sub-grades with different stress levels for a range of reference temperatures. Six variables are used in the expression given to determine the required reference temperature that should be considered. The UK National Annex presents a modified table for a single stress level, with an adjustment to reference temperature for actual stress level.

The UK National Annex also refers to Non Contradictory Complimentary Information (NCCI) given in Published Document PD 6695-1-10:2009 for further guidance.

The procedure for determining the maximum thickness values for steelwork in buildings is given in 2.2 of PD 6695-1-10, with reference to Tables 2 and 3 in that document. That guidance is used in this example.

1.2 Design combination and value of actions

According to BS EN 1993-1-10 the design condition should consider the following combination of actions

$$A[T_{Ed}] + \sum G_k + \psi_1 Q_{k1} + \psi_{2,i} Q_{ki}$$

BS EN 1993-1-10 (2.1)

in which T_{Ed} is the reference temperature. For buildings the value of T_{Ed} for exposed steelwork is given by the UK National Annex to BS EN 1993-1-1 as –15°C.

BS EN 1993-1-1 NA. 2.6

For this example the values of stress in the column and the beam are those due to G_k and Q_{k1}.

Beam σ_{Ed} = ± 175 N/mm² in the flanges

Column σ_{Ed} is compressive in all parts of the column cross-section.

1.3 Joint details

1.3.1 Section properties

457 × 191 × 98 UKB

From section property tables:

Depth	h	= 467.2 mm
Width	b	= 192.8 mm
Web thickness	t_w	= 11.4 mm
Flange thickness	t_f	= 19.6 mm

P363

305 × 305 × 198 UKC

From section property tables:

Depth	h	= 339.9 mm
Width	b	= 314.5 mm
Web thickness	t_w	= 19.1 mm
Flange thickness	t_f	= 31.4 mm

P363

For buildings that will be built in the UK, the nominal values of the yield strength (f_y) and the ultimate strength (f_u) for structural steel should be those obtained from the product standard. Where a range is given, the lowest nominal value should be used.

BS EN 1993-1-1 NA.2.4

For S355 steel and 16 mm $< t \leq$ 40 mm

Yield strength $f_y = R_{eH}$ = 345 N/mm²

BS EN 10025-2 Table 7

1.3.2 Welds

Fillet weld leg length 12 mm

For the beam flange, the dimensions of the fillet weld to consider are:

Attachment 'length of weld' Not applicable

Attachment 'width of weld' 192.8 mm (width of beam)

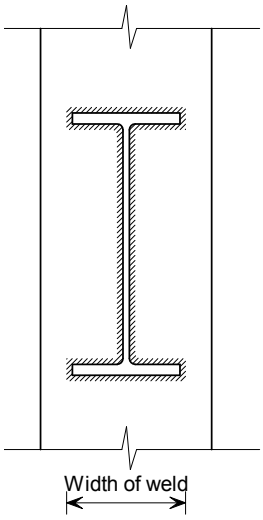

For the column flange the dimensions of the fillet weld at the edges of the flange that need to be considered are:
Attachment 'length of weld' 43.5 mm (beam flange thickness + 2 welds)
Attachment 'width of weld' 295 mm (width of beam)

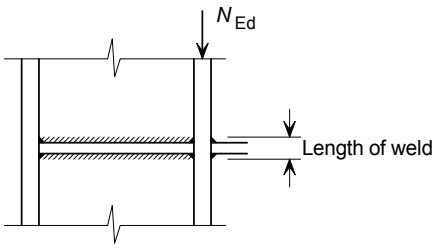

Note: The weld dimensions are as defined in Table NA.1, 'length of weld' is measured in the direction of the tensile stress and 'width of weld' is measured transverse to the direction of the tensile stress.

1.4 Beam sub-grade

Consider the beam flange

Classify detail

The detail should be classified in terms of ΔT_{RD} following the guidance given in NA.2.1.1.2 of BS EN 1993-1-10. — PD 6695-1-10 2.2i)

The dimension of the welded attachment considered here fall outside of the limits given in Table NA.1 as the length is not applicable. Therefore, — Table NA.1

$\Delta T_{RD} = 0°C$ — NA.2.1.1.2

For external steelwork and $\Delta T_{RD} = 0°C$ the detail type is:
'Welded – moderate' — PD 6695-1-10 Table 3

Tensile stress level

The tensile stress level at the detail is: — PD 6695-1-10 2.2ii)

$$\frac{\sigma_{Ed}}{f_y(t)} = \frac{175}{345} = 0.51$$

Initial column in table

For a 'welded – moderate' detail and $\frac{\sigma_{Ed}}{f_y(t)} = 0.51 > 0.5$

PD 6695-1-10 Table 3

The initial column in the table is 'Comb 7'.

Adjustment to table column selection

Verify whether the initial table column selection needs to be altered for the criteria given in Note A to Table 3.

Charpy test temperature

NA.2.1.1.4 of the UK National Annex to BS EN 1993-1-10 gives adjustments to the reference temperature based on the difference between the Charpy test temperature and the minimum steel temperature. These adjustments have been accounted for in the Tables given in PD 6695-1-10.

Gross stress concentration factor (ΔT_{Rg})

There are no areas of gross stress concentration on the beam flange. Therefore the criterion is met, thus

$\Delta T_{Rg} = 0$

Radiation loss (ΔT_r)

There is no radiation loss for the joint considered here. Therefore the criterion is met, thus

$\Delta T_r = 0$

Strain rate ($\Delta T_{\dot{\varepsilon}}$)

Here the strain rate is not different to the reference strain rate given in BS EN 1993-1-5 ($\dot{\varepsilon} = 4 \times 10^{-4}$ /sec). Therefore the criterion is met, thus

$\Delta T_{\dot{\varepsilon}} = 0$

Cold forming ($\Delta T_{\varepsilon_{cf}}$)

The sections considered here are hot rolled, therefore no cold forming is present and the criterion is met, thus

$\Delta T_{\varepsilon_{cf}} = 0$

As all four criteria are met the table column selection does not need to be adjusted.

For S355, 'welded – moderate' and $\frac{\sigma_{Ed}}{f_y(t)} = 0.51$, the limiting steel thicknesses are:

PD 6695-1-10 Table 3

JR 12.5 mm
J0 37.5 mm

12.5 mm < 19.5 mm < 37.5 mm

Therefore, an appropriate steel grade for the UKB section is S355J0.

1.5 Column sub-grade

Consider the fillet weld at the edges of the column flange

Classify detail

The dimensions of the welded attachment considered here fall outside of the limits given in Table NA.1 as, — Table NA.1

'Length of fillet weld' = 43.5 mm < 150 mm. — Sheet 2

Therefore,

$\Delta T_{RD} = 0°C$ — NA.2.1.1.2

For external steelwork and $\Delta T_{RD} = 0°C$, the detail type is: 'welded – moderate' — PD 6695-1-10 Table 3

Tensile stress level

The tensile stress level at the detail is zero as the vertical compression present in the UKC due to vertical actions is greater than the localised tension applied by the beam. Thus, — PD 6695-1-10 2.2ii)

$$\frac{\sigma_{Ed}}{f_y(t)} < 0$$

Initial column in table

For a 'welded – moderate' detail and $\frac{\sigma_{Ed}}{f_y(t)} = 0$ — PD 6695-1-10 Table 3

The initial column in the table is 'Comb 4'.

Adjustment to table column selection

Verify whether the initial table column selection needs to be altered for the criteria given in Note A to Table 3.

Charpy test temperature

No adjustment is required, see Sheet 4.

Gross stress concentration factor (ΔT_{Rg})

As stiffeners are present there are no areas of gross stress concentration on the column flange. Therefore the criterion is met, thus

$\Delta T_{Rg} = 0$

Radiation loss (ΔT_r)

As for the beam $\Delta T_r = 0$ — Sheet 4

Strain rate ($\Delta T_{\dot{\varepsilon}}$)

As for the beam $\Delta T_{\dot{\varepsilon}} = 0$ — Sheet 4

Cold forming ($\Delta T_{\varepsilon_{cf}}$)

The sections considered here are hot rolled, therefore no cold forming is present and the criterion is met, thus

$\Delta T_{\varepsilon_{cf}} = 0$

As all four criteria are met, the table column selection does not need to be adjusted.

For S355, 'welded – moderate' and $\frac{\sigma_{Ed}}{f_y(t)} = 0$, the limiting steel thicknesses are:

PD 6695-1-10 Table 3

JR 22.5 mm
J0 67.5 mm

22.5 mm < 31.4 mm < 67.5 mm

Therefore, an appropriate steel grade for the UKC section is S355J0.

Note: If the thickness had required the use of M, N, HL or NL sub-grade, it should be noted the f_y and f_u values may differ slightly from those for sub-grades JR, J2 and J0.

References are to BS EN 1993-1-1: 2005, including its National Annex, unless otherwise stated.

2 Simply supported laterally restrained beam

2.1 Scope

The beam shown in Figure 2.1 is fully laterally restrained along its length and has bearing lengths of 50 mm at the unstiffened supports and 75 mm under the point load. Design the beam in S275 steel for the loading shown below.

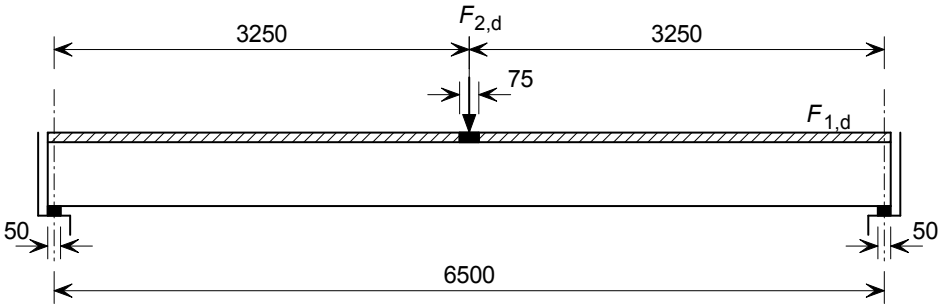

Figure 2.1

The design aspects covered in this example are:

- Calculation of design values of actions for ULS and SLS
- Cross section classification
- Cross sectional resistance:
  - Shear buckling
  - Shear
  - Bending moment
- Resistance of web to transverse forces
- Vertical deflection of beam at SLS.

2.2 Actions (loading)

2.2.1 Permanent actions

Uniformly distributed load (including self weight) $g_1 = 15$ kN/m

Concentrated load $G_2 = 40$ kN

2.2.2 Variable actions

Uniformly distributed load q_1 = 30 kN/m
Concentrated load Q_2 = 50 kN

The variable actions are not due to storage and are not independent of each other.

2.2.3 Partial factors for actions

For the design of structural members not involving geotechnical actions, the partial factors for actions to be used for ultimate limit state design should be obtained from Table A1.2(B), as modified by the National Annex.

BS EN 1990 A1.3.1(4)

Partial factor for permanent actions γ_G = 1.35
Partial factor for variable actions γ_Q = 1.50
Reduction factor ξ = 0.925

Table NA.A1.2(B)

Note: For this example, the combination coefficient (ψ_0) is not required, see section 2.2.4.

2.2.4 Design values of combined actions for Ultimate Limit State

BS EN 1990 presents two options for determining the effect due to combination of actions to be used for the ultimate limit state verification. The options are to use Expression (6.10) or to determine the less favourable combination from Expression (6.10a) and (6.10b). The UK National Annex to BS EN 1990 allows the designer to choose which of those options to use. Here Expressions (6.10a) and (6.10b) are considered.

$$\gamma_{Gj,sup} G_{j,sup} + \gamma_{Gj,inf} G_{j,inf} + \gamma_{Q,1} \psi_{0,1} Q_1 + \gamma_{Q,i} \psi_{0,i} Q_i \qquad (6.10a)$$

$$\xi \gamma_{Gj,sup} G_{j,sup} + \gamma_{Gj,inf} G_{j,inf} + \gamma_{Q,1} Q_1 + \gamma_{Q,i} \psi_{0,i} Q_i \qquad (6.10b)$$

BS EN 1990 Table NA.A1.2(B)

where:

Subscript 'sup' defines an unfavourable action

Subscript 'inf' defines a favourable action.

According to the National Annex, these expressions may be used where:

- The ULS 'STR' (strength) is being considered
- The structure is to be constructed in the UK
- Only one variable action is present from categories A to H, except E (storage) given in BS EN 1990.

Expression (6.10b) will normally be the governing case in the UK, except for cases were the permanent actions are greater than 4.5 times the variable actions.

Therefore, as the permanent actions are not greater than 4.5 times the variable actions, only Expression (6.10b) is considered here.

As the variable actions are not independent of each other, there are no accompanying variable actions. Therefore, the Q_i variable is not considered here.

UDL (including self weight)

$$F_{1,d} = \xi\gamma_G G_1 + \gamma_Q Q_1 = (0.925 \times 1.35 \times 15) + (1.5 \times 30) = 63.7 \text{ kN/m}$$

Concentrated load

$$F_{2,d} = \xi\gamma_G G_2 + \gamma_Q Q_2 = (0.925 \times 1.35 \times 40) + (1.5 \times 50) = 125.0 \text{ kN}$$

2.3 Design bending moments and shear forces

Span of beam L = 6500 mm

Maximum design bending moment occurs at mid-span

$$M_{Ed} = \frac{F_{1,d} L^2}{8} + \frac{F_{2,d} L}{4} = \frac{63.7 \times 6.5^2}{8} + \frac{125 \times 6.5}{4} = 539.5 \text{ kNm}$$

Maximum design shear force occurs at the supports

$$V_{Ed} = \frac{F_{1,d} L}{2} + \frac{F_{2,d}}{2} = \frac{63.7 \times 6.5}{2} + \frac{125}{2} = 269.5 \text{ kN}$$

Design shear force at mid-span

$$V_{c,Ed} = V_{Ed} - \frac{F_{1,d} L}{2} = 269.50 - \frac{63.7 \times 6.5}{2} = 62.5 \text{ kN}$$

2.4 Section properties

533 × 210 × 92 UKB in S275

From section property tables:

Depth	h	= 533.1 mm	P363
Width	b	= 209.3 mm	
Web thickness	t_w	= 10.1 mm	
Flange thickness	t_f	= 15.6 mm	
Root radius	r	= 12.7 mm	
Depth between flange fillets	d	= 476.5 mm	
Second moment of area, *y-y* axis	I_y	= 55 200 cm^4	
Plastic modulus, *y-y* axis	$W_{pl,y}$	= 2 360 cm^3	
Area	A	= 117 cm^2	
Modulus of elasticity	E	= 210 000 N/mm^2	3.2.6(1)

For buildings that will be built in the UK, the nominal values of the yield strength (f_y) and the ultimate strength (f_u) for structural steel should be those obtained from the product standard. Where a range is given, the lowest nominal value should be used. — NA.2.4

For S275 steel and $t \leq 16$ mm — BS EN 10025-2 Table 7

Yield strength $f_y = R_{eH}$ = 275 N/mm^2

2.5 Cross section classification

$$\varepsilon = \sqrt{\frac{235}{f_y}} = \sqrt{\frac{235}{275}} = 0.92$$ Table 5.2

Outstand of compression flange

$$c = \frac{b - t_w - 2r}{2} = \frac{209.3 - 10.1 - (2 \times 12.7)}{2} = 86.90 \text{ mm}$$

$$\frac{c}{t_f} = \frac{86.90}{15.6} = 5.57$$

The limiting value for Class 1 is $\frac{c}{t_f} \leq 9\varepsilon = 9 \times 0.92 = 8.28$

$5.57 < 8.28$

Therefore the flange is Class 1 under compression.

Web subject to bending

$c = d = 476.5$ mm Table 5.2

$$\frac{c}{t_w} = \frac{476.5}{10.1} = 47.18$$

The limiting value for Class 1 is $\frac{c}{t_w} \leq 72\varepsilon = 72 \times 0.92 = 66.24$

$47.18 < 66.24$

Therefore the web is Class 1 under bending.

Therefore the section is Class 1 under bending.

2.6 Partial factors for resistance

$\gamma_{M0} = 1.0$ NA.2.15

$\gamma_{M1} = 1.0$

2.7 Cross-sectional resistance

2.7.1 Shear buckling

The shear buckling resistance for webs should be verified according to Section 5 of BS EN 1993-1-5 if: 6.2.6(6)

$$\frac{h_w}{t_w} > \frac{72\varepsilon}{\eta}$$ Eq (6.23)

$\eta = 1.0$ BS EN 1993-1-5 NA.2.4

$h_w = h - 2t_f = 533.1 - (2 \times 15.6) = 501.9$ mm

$$\frac{h_w}{t_w} = \frac{501.9}{10.1} = 49.7$$

$$72\frac{\varepsilon}{\eta} = 72 \times \frac{0.92}{1.0} = 66.2$$

$49.7 < 66.2$

Therefore the shear buckling resistance of the web does not need to be verified.

2.7.2 Shear resistance

Verify that: 6.2.6(1)

$$\frac{V_{Ed}}{V_{c,Rd}} \leq 1.0$$ Eq (6.17)

$V_{c,Rd}$ is the design plastic shear resistance ($V_{pl,Rd}$).

$$V_{c,Rd} = V_{pl,Rd} = \frac{A_v\,(f_y/\sqrt{3})}{\gamma_{M0}}$$ 6.2.6(2) Eq (6.18)

A_v is the shear area and is determined as follows for rolled I and H sections with the load applied parallel to the web.

$A_v = A - 2bt_f + t_f\left(t_w + 2r\right)$ But not less than $\eta h_w t_w$ 6.2.6(3)

$$= 117 \times 10^2 - \left(2 \times 209.3 \times 15.6\right) + 15.6 \times \left(10.1 + (2 \times 12.7)\right) = 5723.6\ \text{mm}^2$$

$$\eta h_w t_w = 1.0 \times 501.9 \times 10.1 = 5069.2\ \text{mm}^2$$

Therefore,

$A_v = 5723.6\ \text{mm}^2$

The design plastic shear resistance is: 6.2.6(2)

$$V_{pl.Rd} = \frac{A_v\,(f_y/\sqrt{3})}{\gamma_{M0}} = \frac{5723.6 \times (275/\sqrt{3})}{1.0} \times 10^{-3} = 909\ \text{kN}$$ Eq (6.18)

Maximum design shear $V_{Ed} = 269.5$ kN Sheet 2

$$\frac{V_{Ed}}{V_{c,Rd}} = \frac{269.5}{909} = 0.30 < 1.0$$

Therefore the shear resistance of the section is adequate.

2.7.3 Resistance to bending

Verify that: 6.2.5(1)

$$\frac{M_{Ed}}{M_{c,Rd}} \leq 1.0$$ Eq (6.12)

At the point of maximum bending moment (mid-span), verify whether the shear force will reduce the bending resistance of the cross section. — 6.2.8(2)

$$\frac{V_{c,Rd}}{2} = \frac{909}{2} = 454.5 \text{ kN}$$

Shear force at maximum bending moment $V_{c,Ed} = 62.5$ kN — Sheet 3

62.5 kN < 454.5 kN

Therefore **no reduction** in bending resistance due to shear is required.

The design resistance for bending for Class 1 and 2 cross sections is: — 6.2.5(2)

$$M_{c,Rd} = M_{pl,Rd} = \frac{W_{pl,y} f_y}{\gamma_{M0}} = \frac{2360 \times 10^3 \times 275}{1.0} \times 10^{-6} = 649.0 \text{ kNm}$$ — Eq (6.13)

$$\frac{M_{Ed}}{M_{c,Rd}} = \frac{539.5}{649} = 0.83 < 1.0$$ — 6.2.5(1) Eq (6.12)

Therefore the bending moment resistance is adequate.

2.7.4 Resistance of the web to transverse forces

References given in Section 2.7.4 refer to BS EN 1993-1-5

This verification is only required when there is bearing on the beam. BS EN 1993-1-1 does not give design verifications for the resistance of webs, designers are referred to BS EN 1993-1-5.

Verify that:

$$\eta_2 = \frac{F_{Ed}}{f_{yw} L_{eff} t_w / \gamma_{M1}} \leq 1.0$$ — 6.6(1), Eq (6.14)

where:

F_{Ed} is the design transverse force – here this is taken to be the design shear force at the supports as these have the smallest bearing lengths (50 mm)

$$\frac{f_{yw} L_{eff} t_w}{\gamma_{M1}} = F_{Rd} \text{ (Design resistance)}$$

L_{eff} is the effective length for resistance to transverse forces, given by, $L_{eff} = \chi_F \ell_y$

$$\chi_F = \frac{0.5}{\bar{\lambda}_F} \leq 1.0$$ — 6.4(1) Eq (6.3)

$$\bar{\lambda}_F = \sqrt{\frac{\ell_y t_w f_{yw}}{F_{cr}}}$$ — 6.4(1) Eq (6.4)

Determine ℓ_y and $\bar{\lambda}_F$

The force is applied to one flange adjacent to an unstiffened end and the compression flange is restrained, therefore it is Type c). — 6.1(2)c) & Figure 6.1

The length of stiff bearing on the flange is the length over which the load is effectively distributed at a slope of 1:1. However, s_s should not be greater than h_w. — 6.3(1) & Figure 6.2

For a slope of 1:1 $s_s = 50$ mm $< h_w = 501.9$ mm

Therefore,

$s_s = 50$ mm

For webs without longitudinal stiffeners k_F should be obtained from Figure 6.1 — 6.4(2) Figure 6.1

For Type c)

$$k_F = 2 + 6\left(\frac{s_s + c}{h_w}\right) \leq 6$$

$c = 0$ mm

$$k_F = 2 + 6 \times \left(\frac{50 + 0}{501.9}\right) = 2.60 < 6$$

For Type c) ℓ_y is the smallest of the values determined from Equations (6.10), (6.11) and (6.12). — 6.5(3)

$\ell_y = s_s + 2t_f\left(1 + \sqrt{m_1 + m_2}\right)$ but $\ell_y \leq$ distance between adjacent stiffeners — 6.5(2) Eq (6.10)

As there are no stiffeners in the beam in this example neglect the above limit for ℓ_y.

Or

$$\ell_y = \ell_e + t_f\sqrt{\frac{m_1}{2} + \left(\frac{\ell_e}{t_f}\right)^2 + m_2}$$ — 6.5(3) Eq (6.11)

Or

$$\ell_y = \ell_e + t_f\sqrt{m_1 + m_2}$$ — Eq (6.12)

where:

$$\ell_e = \frac{k_F E t_w^2}{2 f_{yw} h_w} \leq s_s + c$$ — Eq (6.13)

$$\ell_e = \frac{2.6 \times 210000 \times 10.1^2}{2 \times 275 \times 501.9} = 201.77 \text{ mm} > s_s + c = 50.0 \text{ mm}$$

Therefore

$\ell_e = s_s + c = 50.0$ mm

Factors m_1 and m_2 are determined as follows:

$$m_1 = \frac{f_{yf} b_f}{f_{yw} t_w} = \frac{275 \times 209.3}{275 \times 10.1} = 20.72$$ — 6.5(1) Eq (6.8)

$$m_2 = 0.02\left(\frac{h_w}{t_f}\right)^2 = 0.02 \times \left(\frac{501.9}{15.6}\right)^2 = 20.70 \text{ when } \bar{\lambda}_F > 0.5$$ — 6.5(1) Eq (6.9)

Or

$m_2 = 0$ when $\bar{\lambda}_F \leq 0.5$

a) First, consider $m_2 = 0$

$$\ell_y = 50 + \left[2 \times 15.6 \times \left(1 + \sqrt{20.72 + 0}\right)\right] = 223.22 \text{ mm}$$ Eq (6.10)

Or

$$\ell_y = \ell_e + t_f \sqrt{\frac{m_1}{2} + \left(\frac{\ell_e}{t_f}\right)^2 + m_2}$$ 6.5(3) Eq (6.11)

$$= 50.0 + 15.6 \times \sqrt{\frac{20.72}{2} + \left(\frac{50}{15.6}\right)^2 + 0} = 120.86 \text{ mm}$$

Or

$$\ell_y = \ell_e + t_f \sqrt{m_1 + m_2} = 50 + 15.6 \times \sqrt{20.72 + 0} = 121.01 \text{ mm}$$ 6.5(3) Eq (6.12)

As 120.86 mm < 121.01 mm < 223.22 mm

$$\ell_y = 120.86 \text{ mm}$$

$$\bar{\lambda}_F = \sqrt{\frac{\ell_y t_w f_{yw}}{F_{cr}}}$$ 6.4(1) Eq (6.4)

$$f_{yw} = 275 \text{ N/mm}^2$$

$$F_{cr} = 0.9 k_F E \frac{t_w^3}{h_w} = 0.9 \times 2.6 \times 210000 \times \frac{10.1^3}{501.9} \times 10^{-3} = 1009 \text{ kN}$$ 6.4(1) Eq (6.5)

Therefore

$$\bar{\lambda}_F = \sqrt{\frac{\ell_y t_w f_{yw}}{F_{cr}}} = \sqrt{\frac{120.86 \times 10.1 \times 275}{1009 \times 10^3}} = 0.58 > 0.5$$ 6.4(1) Eq (6.4)

As $\bar{\lambda}_F > 0.5$, m_2 must be determined and ℓ_y recalculated

$m_2 = 20.70$ Sheet 7

b) Recalculate for $m_2 = 20.70$

$$\ell_y = 50 + \left[2 \times 15.6 \times \left(1 + \sqrt{20.72 + 20.70}\right)\right] = 282.00 \text{ mm}$$ 6.5(2) Eq (6.10)

Or

$$\ell_y = 50.0 + 15.6 \times \sqrt{\frac{20.72}{2} + \left(\frac{50}{15.6}\right)^2 + 20.70} = 150.29 \text{ mm}$$ 6.5(3) Eq (6.11)

Or

$$\ell_y = 50 + 15.6 \times \sqrt{20.72 + 20.70} = 150.40 \text{ mm}$$ 6.5(3) Eq (6.12)

As 150.29 mm < 150.40 mm < 282.00 mm

$$\ell_y = 150.29 \text{ mm}$$

$$\bar{\lambda}_F = \sqrt{\frac{\ell_y t_w f_{yw}}{F_{cr}}} = \sqrt{\frac{150.29 \times 10.1 \times 275}{1009 \times 10^3}} = 0.64 > 0.5$$ 6.4(1) Eq (6.4)

As $0.64 > 0.5$, $\bar{\lambda}_F = 0.64$

Determine χ_F

$$\chi_F = \frac{0.5}{\bar{\lambda}_F} \leq 1.0$$ 6.4(1) Eq (6.3)

$$\chi_F = \frac{0.5}{0.64} = 0.78$$

Determine L_{eff}

$$L_{eff} = \chi_F \ell_y = 0.78 \times 150.29 = 117.23 \text{ mm}$$ 6.2(1) Eq (6.2)

Determine F_{Rd}

$$F_{Rd} = \frac{f_{yw} L_{eff} t_w}{\gamma_{M1}} = \frac{275 \times 117.23 \times 10.1}{1.0} \times 10^{-3} = 326 \text{ kN}$$ 6.2(1) Eq (6.1)

Determine η_2

$$\eta_2 = \frac{F_{Ed}}{f_{yw} L_{eff} t_w / \gamma_{M1}} = \frac{V_{Ed}}{F_{Rd}} = \frac{269.5}{326} = 0.83 < 1.0$$ 6.6(1) Eq (6.14)

Therefore the web resistance to transverse forces is adequate.

2.8 Vertical deflection at serviceability limit state

A structure should be designed and constructed such that all relevant serviceability criteria are satisfied. 7.1(1)

No specific requirements at SLS are given in BS EN 1993-1-1, 7.1; it is left for the project to specify the limits, associated combinations of actions and analysis model. Guidance on the selection of criteria is given in BS EN 1990, A.1.4.

For this example, the only serviceability limit state that is to be considered is the vertical deflection under variable actions, because excessive deflection would damage brittle finishes which are added after the permanent actions have occurred. The limiting deflection for this beam is taken to be span/360, which is consistent with common design practice.

2.8.1 Design values of combined actions at Serviceability Limit State

As noted in BS EN 1990, the SLS partial factors on actions are taken as unity and expression 6.14a is used to determine design effects. Additionally, as stated in Section 2.2.2, the variable actions are not independent and therefore no combination factors (ψ_i) are required. Thus, the combination values of actions are given by: BS EN 1990 A1.4.1(1)

$F_{1,d,ser} = g_1 + q_1$ and $F_{2,d,ser} = G_2 + Q_2$

As noted above, the permanent actions considered in this example occur during the construction process, therefore only the variable actions need to be considered in the serviceability verification for the functioning of the structure.

BS EN 1990 A1.4.3(3)

Thus $F_{1,\mathrm{d,ser}} = q_1 = 30.0$ kN/m and $F_{2,\mathrm{d,ser}} = Q_2 = 50.0$ kN

2.8.2 Design value of deflection

The vertical deflection is given by:

$$w = \left(\frac{1}{EI_y}\right)\left(\frac{5F_{1,\mathrm{d},ser}L^4}{384} + \frac{F_{2,\mathrm{d,ser}}L^3}{48}\right)$$

$$= \left(\frac{1}{210000 \times 55200 \times 10^4}\right) \times \left(\frac{5 \times 30 \times 6500^4}{384} + \frac{50000 \times 6500^3}{48}\right)$$

$$= 8.5 \text{ mm}$$

The vertical deflection limit is

$$w_{\mathrm{lim}} = \frac{L}{360} = \frac{6500}{360} = 18.1 \text{ mm}$$

8.5 mm < 18.1 mm

Therefore the vertical deflection of the beam is satisfactory.

2.9 Blue Book Approach

Page references in Section 2.9 are to P363 unless otherwise stated.

The design resistances may be obtained from SCI publication P363

Consider the 533 × 210 × 92 UKB in S275

2.9.1 Design values of actions for Ultimate Limit State (ULS)

Sheet 3

Shear at the supports	V_{Ed}	= 269.5 kN
Shear at maximum bending moment	$V_{\mathrm{c,Ed}}$	= 62.5 kN
Maximum bending moment	M_{Ed}	= 539.5 kNm

2.9.2 Cross section classification

Under bending about the major axis (*y-y*) the cross section is Class 1.

Page C-66

2.9.3 Shear resistance

Page C-103

$V_{\mathrm{c,Rd}} = 909$ kN

$$\frac{V_{\mathrm{Ed}}}{V_{\mathrm{c,Rd}}} = \frac{269.5}{909} = 0.30 < 1.0$$

Therefore the shear resistance is adequate

2.9.4 Bending resistance

$$\frac{V_{\mathrm{c,Rd}}}{2} = \frac{909}{2} = 454.5 \text{ kN}$$

454.5 kN > $V_{\mathrm{c,Ed}}$ = 62.5 kN

Therefore there is **no reduction** in the bending resistance.

$M_{c,y,Rd}$ = 649 kNm

Page C-66

$$\frac{M_{Ed}}{M_{c,y,Rd}} = \frac{539.5}{649} = 0.83 < 1.0$$

Therefore the bending moment resistance is adequate

2.9.5 Resistance of the web to transverse forces at the end of the beam

$F_{Ed} = V_{Ed}$ = 269.5 kN

$s_s + c$ = 50 + 0 = 50 mm

Therefore, for s_s = 50 mm and c = 0

F_{Rd} = 324 kN

Page C-103

$$\frac{F_{Ed}}{F_{Rd}} = \frac{269.5}{324} = 0.83 < 1.0$$

Therefore the resistance of the web to transverse forces is adequate

Note

The Blue Book (SCI P363) does not include deflection values, so the SLS deflection verification must be carried out as in Section 2.8 of this example.

References are to BS EN 1993-1-1: 2005, including its National Annex, unless otherwise stated.

3 Unrestrained beam with end bending moments

3.1 Scope

The beam shown in Figure 3.1 has moment resisting connections at its ends and carries concentrated loads. The intermediate concentrated loads are applied through the bottom flange. These concentrated loads **do not** provide restraint against lateral-torsional buckling. Design the beam in S275 steel.

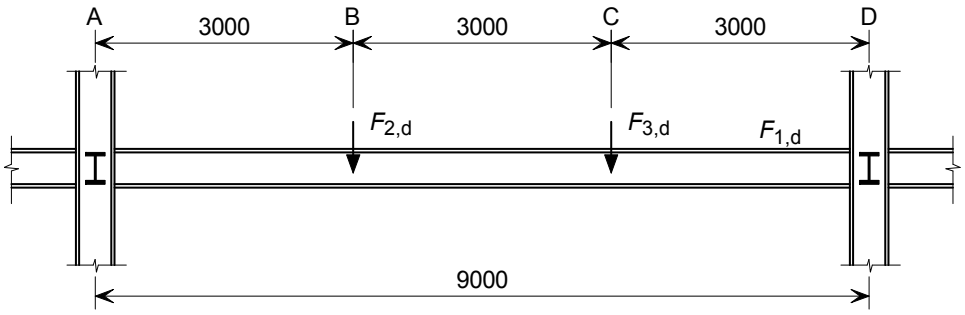

Figure 3.1

The design aspects covered in this example are:

- Calculation of design values of actions for ULS
- Cross section classification
- Cross sectional resistance:
  - Shear buckling
  - Shear
  - Bending moment
- Lateral torsional buckling resistance.

Calculations for the verification of the vertical deflection of the beam under serviceability limit state loading are not given.

3.2 Actions (loading)

3.2.1 Permanent actions

Uniformly distributed load (Self weight) g = 3 kN/m

Concentrated load 1 G_1 = 40 kN

Concentrated load 2 G_2 = 20 kN

3.2.2 Variable actions

Concentrated load 1 $Q_1 = 60$ kN

Concentrated load 2 $Q_2 = 30$ kN

The variable actions considered here are not due to storage and are not independent of each other.

3.2.3 Partial factors for actions

Partial factor for permanent actions $\gamma_G = 1.35$

Partial factor for variable actions $\gamma_Q = 1.50$

Reduction factor $\xi = 0.925$

Table NA.A1.2(B)

Note: For this example, the combination coefficient (ψ_0) is not required, see Section 3.2.4.

3.2.4 Design values of combined actions for Ultimate Limit State

As the permanent actions are not greater than 4.5 times the variable actions, only Expression (6.10b) is considered here. See discussion on choice of combination of actions in Section 2.2.4 of Example 2.

$$\xi\gamma_{Gj,\sup}G_{j,\sup} + \gamma_{Gj,\inf}G_{j,\inf} + \gamma_{Q,1}Q_1 + \gamma_{Q,i}\psi_{0,i}Q_i$$

BS EN 1990 Eq (6.10b)

As the variable actions are not independent of each other, there are no accompanying variable actions. Therefore, the Q_i variable is not considered here.

UDL (self weight)

$$F_{1,d} = \xi\gamma_G g = (0.925 \times 1.35 \times 3) = 3.7 \text{ kN/m}$$

EN 1990 Table NA.A1.2(B)

Concentrated load 1

$$F_{2,d} = \xi\gamma_G G_1 + \gamma_Q Q_1 = (0.925 \times 1.35 \times 40) + (1.5 \times 60) = 140.0 \text{ kN}$$

Concentrated load 2

$$F_{3,d} = \xi\gamma_G G_2 + \gamma_Q Q_2 = (0.925 \times 1.35 \times 20) + (1.5 \times 30) = 70.0 \text{ kN}$$

3.3 Design values of bending moments and shear forces

The design effects due to the above combined actions are calculated as follows:

Design bending moment at A $M_{A,Ed} = 260$ kNm

Design bending moment at B $M_{B,Ed} = 134$ kNm

Design bending moment at C $M_{C,Ed} = 78$ kNm

Design bending moment at D $M_{D,Ed} = 223$ kNm

Maximum design shear force (at A) $V_{A,Ed} = 137$ kN

Design shear force at D $V_{D,Ed} = 106$ kN

The design bending moments and shear forces are shown in Figure 3.2

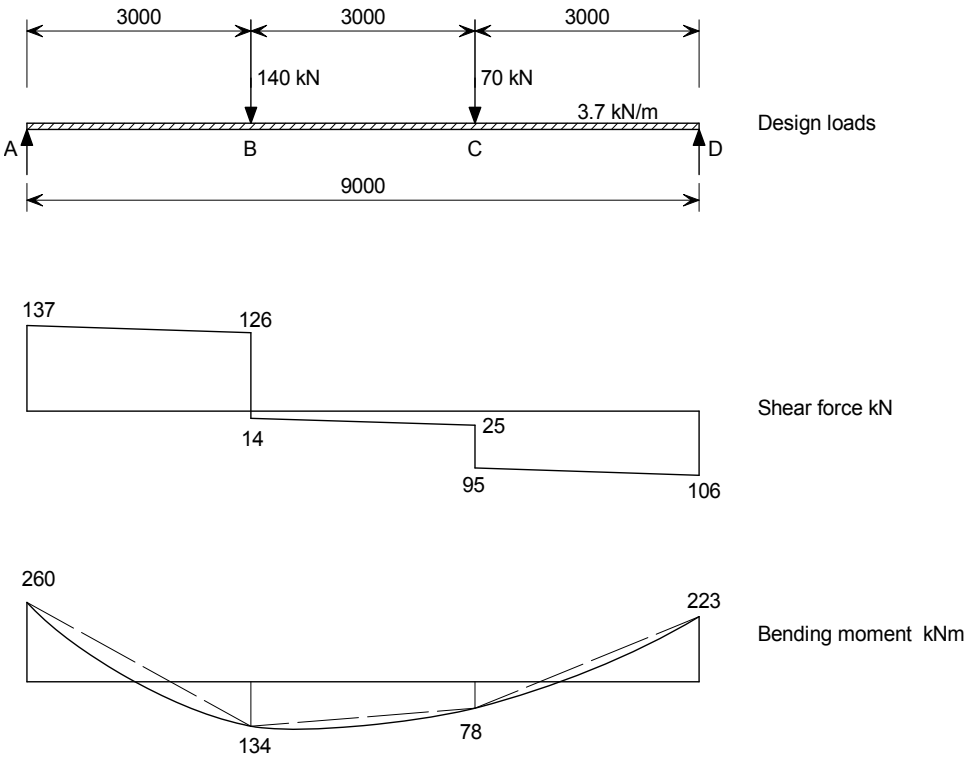

Figure 3.2

3.4 Buckling length (L_{cr})

Since the beam is unrestrained between the supports, there is only one segment to consider in this example, with a length equal to the beam length.

BS EN 1993-1-1 does not give guidance for determining buckling lengths. For beams, the buckling length should be taken as being equal to the span length unless the designer considers the beam to be restrained.

L_{cr} = 9.0 m

3.5 Section Properties

457 × 191 × 67 UKB in S275.

From section property tables:

Depth	h	= 453.4 mm	P363
Width	b	= 189.9 mm	
Web thickness	t_w	= 8.5 mm	
Flange thickness	t_f	= 12.7 mm	
Depth between fillets	d	= 407.6 mm	
Plastic modulus, y-y axis	$W_{pl,y}$	= 1 470 cm^3	
Area	A	= 85.5 cm^2	
Modulus of elasticity	E	= 210 000 N/mm^2	3.2.6(1)

For buildings that will be built in the UK, the nominal values of the yield strength (f_y) and the ultimate strength (f_u) for structural steel should be those obtained from the product standard. Where a range is given, the lowest nominal value should be used. — NA.2.4

For S275 steel and $t \leq 16$ mm
Yield strength $f_y = R_{eH} = 275$ N/mm^2 — BS EN 10025-2 Table 7

3.6 Cross section classification

$$\varepsilon = \sqrt{\frac{235}{f_y}} = \sqrt{\frac{235}{275}} = 0.92$$ — Table 5.2

Outstand of compression flange

$$c = \frac{b - t_w - 2r}{2} = \frac{189.9 - 8.5 - (2 \times 10.2)}{2} = 80.50 \text{ mm}$$

$$\frac{c}{t_f} = \frac{80.5}{12.7} = 6.34$$

The limiting value for Class 1 is $\frac{c}{t_f} \leq 9\varepsilon = 9 \times 0.92 = 8.28$

$6.34 < 8.28$

Therefore, the flange is Class 1 under compression.

Web subject to bending

$c = d = 407.6$ mm

$$\frac{c}{t_w} = \frac{407.6}{8.5} = 47.95$$

The limiting value for Class 1 is $\frac{c}{t_f} \leq 72\varepsilon = 72 \times 0.92 = 66.24$

$47.95 < 66.24$

Therefore, the web is Class 1 under bending.

Therefore, the cross section is Class 1 under bending.

3.7 Partial factors for resistance

$\gamma_{M0} = 1.0$ — NA.2.15
$\gamma_{M1} = 1.0$

3.8 Cross-sectional resistance

3.8.1 Shear buckling

The shear buckling resistance for webs should be verified according to section 5 of BS EN 1993-1-5 if: — 6.2.6(6)

$$\frac{h_w}{t_w} > 72\frac{\varepsilon}{\eta}$$ — Eq (6.23)

$\eta = 1.0$ — BS EN 1993-1-5 NA,2.4

$h_w = h - 2t_f = 453.4 - (2 \times 12.7) = 428.00$ mm

$$\frac{h_w}{t_w} = \frac{428.0}{8.5} = 50.35$$

$$72\frac{\varepsilon}{\eta} = 72 \times \frac{0.92}{1.0} = 66.24$$

$50.35 < 66.24$

Therefore the shear buckling resistance of the web does not need to be verified.

3.8.2 Shear resistance

Verify that: — 6.2.6(1)

$$\frac{V_{Ed}}{V_{c,Rd}} \leq 1.0$$ — Eq (6.17)

$V_{c,Rd}$ is the design plastic shear resistance ($V_{pl,Rd}$).

$$V_{pl.Rd} = \frac{A_v\,(f_y/\sqrt{3})}{\gamma_{M0}}$$

A_v is the shear area and is determined as follows for rolled I and H sections with the load applied parallel to the web.

$A_v = A - 2bt_f + t_f(t_w + 2r)$ but not less than $\eta h_w t_w$

$= 85.5 \times 10^2 - (2 \times 189.9 \times 12.7) + 12.7 \times (8.5 + (2 \times 10.2)) = 4093.57$ mm^2

$\eta h_w t_w = 1.0 \times 428 \times 8.5 = 3638.00$ mm^2

Therefore, $A_v = 4093.57$ mm^2

The design plastic shear resistance is:

$$V_{c,Rd} = V_{pl,Rd} = \frac{A_v\,(f_y/\sqrt{3})}{\gamma_{M0}} = \frac{4093.57 \times (275/\sqrt{3})}{1.0} \times 10^{-3} = 650.0 \text{ kN}$$ — 6.2.6(2) Eq (6.18)

Maximum design shear occurs at A, therefore the design shear is

$V_{A,Ed,} = 137$ kN

$$\frac{V_{A,Ed}}{V_{c,Rd}} = \frac{137}{650} = 0.21 < 1.0$$

Therefore the shear resistance of the section is adequate.

3.8.3 Resistance to bending

Verify that: 6.2.5(1) Eq (6.12)

$$\frac{M_{Ed}}{M_{c,Rd}} \leq 1.0$$

At the point of maximum bending (A), check if the presence of shear reduces the bending moment resistance of the section.

$$\frac{V_{c,Rd}}{2} = \frac{650}{2} = 325.0 \text{ kN}$$

Shear force at maximum bending moment $V_{A,Ed,} = 137$ kN

137 kN < 325.0 kN

Therefore **no reduction** in bending resistance due to shear is required. 6.2.8(2)

The design resistance for bending for Class 1 and 2 cross-sections is: 6.2.5(2)

$$M_{c,Rd} = M_{pl,Rd} = \frac{W_{pl,y} f_y}{\gamma_{M0}} = \frac{1470 \times 10^3 \times 275}{1.0} \times 10^{-6} = 404 \text{ kNm}$$ Eq (6.13)

$$\frac{M_{A,Ed}}{M_{c,Rd}} = \frac{260}{404} = 0.64 < 1.0$$ Eq (6.12)

Therefore the bending resistance of the cross section is adequate.

3.9 Buckling resistance of member in bending

If the lateral torsional buckling slenderness ($\bar{\lambda}_{LT}$) is less than or equal to $\bar{\lambda}_{LT,0}$ the effects of lateral torsional buckling may be neglected, and only cross-sectional verifications apply. 6.3.2.2(4)

The value of $\bar{\lambda}_{LT,0}$ for rolled sections is given by the UK National Annex as NA.2.17

$\bar{\lambda}_{LT,0} = 0.4$

$$\bar{\lambda}_{LT} = \sqrt{\frac{W_y f_y}{M_{cr}}}$$ 6.3.2.2(1)

$W_y = W_{pl,y}$ For class 1 or 2 cross sections.

BS EN 1993-1-1 does not give a method for determining the elastic critical moment for lateral-torsional buckling (M_{cr}). Here the 'LTBeam' software (which can be downloaded from the CTICM website) has been used to determine M_{cr}.

When determining M_{cr} the following end restraint conditions have been applied to the beam.

***LTBeam* symbol**	**Definition**	**Restraint applied (fixed/free)**
v	Lateral restraint	Fixed
θ	Torsional restraint	Fixed
v'	Flexural restraint	Free
θ'	Warping restraint	Free

The value for the elastic critical moment obtained from '*LTBeam*' is:

M_{cr} = 355.7 kNm

Therefore,

$$\bar{\lambda}_{LT} = \sqrt{\frac{1470 \times 10^3 \times 275}{355.7 \times 10^6}} = 1.07$$

$1.07 > 0.4\ (\bar{\lambda}_{LT,0})$

Therefore the resistance to lateral-torsional buckling must be verified. — 6.3.2.2(4)

Verify that:

$$\frac{M_{Ed}}{M_{b,Rd}} \leq 1.0$$

6.3.2.1(1) Eq (6.54)

The design buckling resistance moment ($M_{b,Rd}$) of a laterally unrestrained beam is determined from: — 6.3.2.1(3) Eq (6.55)

$$M_{b.Rd} = \chi_{LT} W_y \frac{f_y}{\gamma_{M1}}$$

where:

W_y = $W_{pl,y}$ for Class 1 and 2 cross-sections

χ_{LT} is the reduction factor for lateral-torsional buckling.

For UKB sections, the method given in 6.3.2.3 for determining χ_{LT} for rolled sections may be used. Therefore,

$$\chi_{LT} = \frac{1}{\Phi_{LT} + \sqrt{\Phi_{LT}^2 - \beta \bar{\lambda}_{LT}^2}} \quad \text{but} \leq 1.0 \text{ and} \leq \frac{1}{\bar{\lambda}_{LT}^2}$$

6.3.2.3(1) Eq (6.57)

where:

$$\Phi_{LT} = 0.5\left(1 + \alpha_{LT}\left(\bar{\lambda}_{LT} - \bar{\lambda}_{LT,0}\right) + \beta \bar{\lambda}_{LT}^2\right)$$

From the UK National Annex, $\bar{\lambda}_{LT,0} = 0.4$ and $\beta = 0.75$ — NA.2.17

$$\frac{h}{b} = \frac{453.4}{189.9} = 2.39$$

$2 < 2.39 < 3.1$, therefore use buckling curve '*c*' — NA.2.17

For buckling curve '*c*', α_{LT} = 0.49 — NA.2.16 & Table 6.5

$$\Phi_{LT} = 0.5\left(1 + 0.49 \times \left(1.07 - 0.4\right) + \left(0.75 \times 1.07^2\right)\right) = 1.09$$ 6.3.2.3(1)

$$\chi_{LT} = \frac{1}{1.09 + \sqrt{1.09^2 - \left(0.75 \times 1.07^2\right)}} = 0.60$$

$$\frac{1}{\bar{\lambda}_{LT}^2} = \frac{1}{1.07^2} = 0.87$$

$0.60 < 0.87 < 1.0$

Therefore,

$$\chi_{LT} = 0.60$$

To account for the shape of the bending moment distribution, χ_{LT} may be modified by the use of a factor 'f'. 6.3.2.3(2)

$$\chi_{LT,mod} = \frac{\chi_{LT}}{f} \text{ but } \chi_{LT,mod} \leq 1.0$$ Eq (6.58)

where:

$$f = 1 - 0.5\left(1 - k_c\right)\left[1 - 2\left(\bar{\lambda}_{LT} - 0.8\right)^2\right] \text{ but } f \leq 1.0$$ 6.3.2.3(2)

$$k_c = \frac{1}{\sqrt{C_1}}$$ NA.2.18

C_1 may be obtained from either tabulated data given in NCCI, such as Access Steel document SN003, or determined from: Access Steel document SN003

$$C_1 = \frac{M_{cr}(\text{actual bending moment diagram})}{M_{cr}(\text{uniform bending moment diagram})}$$

As a value for C_1 for the bending moment diagram given in Figure 3.2 of this example is not given in the Access Steel document SN003 the value for C_1 will be calculated. Access Steel document SN003

Applying a uniform bending moment to the beam the value of M_{cr} determined from the '*LTBeam*' software is:

$$M_{cr} = 134.2 \text{ kNm}$$

$$C_1 = \frac{355.7}{134.2} = 2.65$$

$$k_c = \frac{1}{\sqrt{2.65}} = 0.61$$

$$f = 1 - 0.5 \times \left(1 - 0.61\right) \times \left[1 - 2 \times \left(1.07 - 0.8\right)^2\right] = 0.83$$ 6.3.2.3(2)

Therefore,

$$\chi_{LT,mod} = \frac{0.60}{0.83} = 0.72 < 1.0$$ Eq (6.58)

The design buckling resistance moment ($M_{b,Rd}$) of a laterally unrestrained beam is determined from:

$$M_{b,Rd} = \chi_{LT} W_y \frac{f_y}{\gamma_{M1}}$$ Eq (6.55)

where:

$$\chi_{LT} = \chi_{LT,mod}$$

Thus,

$$M_{b,Rd} = 0.72 \times 1470 \times 10^3 \times \frac{275}{1.0} \times 10^{-6} = 291 \text{ kNm}$$

$$\frac{M_{A,Ed}}{M_{b,Rd}} = \frac{260}{291} = 0.89 < 1.0$$ Sheet 2 6.3.2.1(1) Eq (6.54)

Therefore the design buckling resistance moment of the member is adequate.

3.10 Vertical deflection at serviceability limit state

The vertical deflections should be verified.

3.11 Blue Book Approach

Page references in Section 3.11 are to P363 unless otherwise stated.

The design resistances may be obtained from SCI publication P363.

Consider the 457 × 191 × 67 UKB in S275

3.11.1 Design bending moments and shear forces

The design bending moments and shear forces are shown in Figure 3.2

Design bending moment (at A) $M_{A,Ed}$ = 260 kNm
Maximum design shear force (at A) $V_{A,Ed}$ = 137 kN

3.11.2 Cross section classification

Under bending the cross section is Class 1. Page C-67

3.11.3 Cross sectional resistance

Shear resistance

$V_{c,Rd}$ = 650 kN Page C-104

$$\frac{V_{A,Ed}}{V_{c,Rd}} = \frac{137}{650} = 0.21 < 1.0$$

Therefore the shear resistance is adequate

Bending resistance

$$\frac{V_{c,Rd}}{2} = \frac{650}{2} = 325 \text{ kN}$$

$$V_{A,Ed} = 137 \text{ kN} < 325 \text{ kN}$$

Therefore there is **no reduction** in the bending resistance.

$M_{c,y,Rd}$ = 405 kNm Page C-67

$$\frac{M_{A,Ed}}{M_{c,y,Rd}} = \frac{260}{405} = 0.64 < 1.0$$

Therefore the bending moment resistance is adequate

3.11.4 Member buckling resistance

From Section 3.8 of this example,

$C_1 = 2.65$ — Sheet 8

From interpolation for $C_1 = 2.65$ and $L = 9.0$ m — Page C-67

$M_{b,Rd} = 290$ kNm

$$\frac{M_{A,Ed}}{M_{b,Rd}} = \frac{260}{290} = 0.90 < 1.0$$

Therefore the buckling moment resistance is adequate

References are to BS EN 1993-1-1: 2005, including its National Annex, unless otherwise stated.

4 Simply supported beam with lateral restraint at load application points

4.1 Scope

The beam shown in Figure 4.1 is laterally restrained at the ends and at the points of load application only. For the loading shown, design the beam in S275 steel.

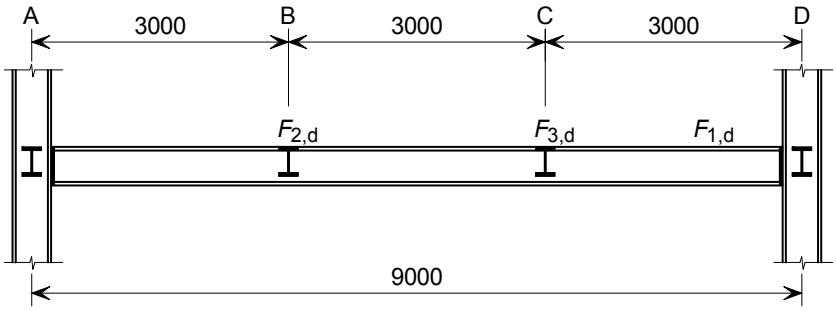

Figure 4.1

The design aspects covered in this example are:

- Calculation of design values of actions for ULS
- Cross section classification
- Cross sectional resistance:
  - Shear buckling
  - Shear
  - Bending moment
- Lateral torsional buckling resistance.

Calculations for the verification of the vertical deflection of the beam under serviceability limit state loading are not given.

4.2 Actions (loading)

4.2.1 Permanent actions

Uniformly Distributed Load (self weight) $g = 3$ kN/m

Concentrated load 1 $G_1 = 40$ kN

Concentrated load 2 $G_2 = 20$ kN

4.2.2 Variable actions

Concentrated load 1 $Q_1 = 60$ kN

Concentrated load 2 $Q_2 = 30$ kN

The variable actions considered here are not due to storage and are not independent of each other.

4.2.3 Partial factors for actions

Partial factor for permanent actions $\gamma_G = 1.35$

Partial factor for variable actions $\gamma_Q = 1.50$

Reduction factor $\xi = 0.925$

BS EN 1990 Table NA.A1.2

Note: For this example the combination coefficient (ψ_0) is not required, see Section 4.2.4.

4.2.4 Design values of combined actions for Ultimate Limit State

As the permanent actions are not greater than 4.5 times the variable actions, only Expression (6.10b) is considered here. See discussion on choice of combination of actions in Section 2.2.4 of Example 2.

$$\xi\gamma_{Gj,\sup}G_{j,\sup} + \gamma_{Gj,\inf}G_{j,\inf} + \gamma_{Q,1}Q_1 + \gamma_{Q,i}\psi_{0,i}Q_i$$

BS EN 1990 Eq (6.10b)

As the variable actions are not independent of each other there are no accompanying variable actions. Therefore, the Q_i variable is not considered here.

UDL (self weight)

$$F_{1,d} = \xi\gamma_G g = (0.925 \times 1.35 \times 3) = 3.7 \text{ kN/m}$$

Concentrated load 1

$$F_{2,d} = \xi\gamma_G G_1 + \gamma_Q Q_1 = (0.925 \times 1.35 \times 40) + (1.5 \times 60) = 140.0 \text{ kN}$$

Concentrated load 2

$$F_{3,d} = \xi\gamma_G G_2 + \gamma_Q Q_2 = (0.925 \times 1.35 \times 20) + (1.5 \times 30) = 70.0 \text{ kN}$$

4.3 Design values of bending moments and shear forces

The design bending moments and shear forces are shown in Figure 4.2.

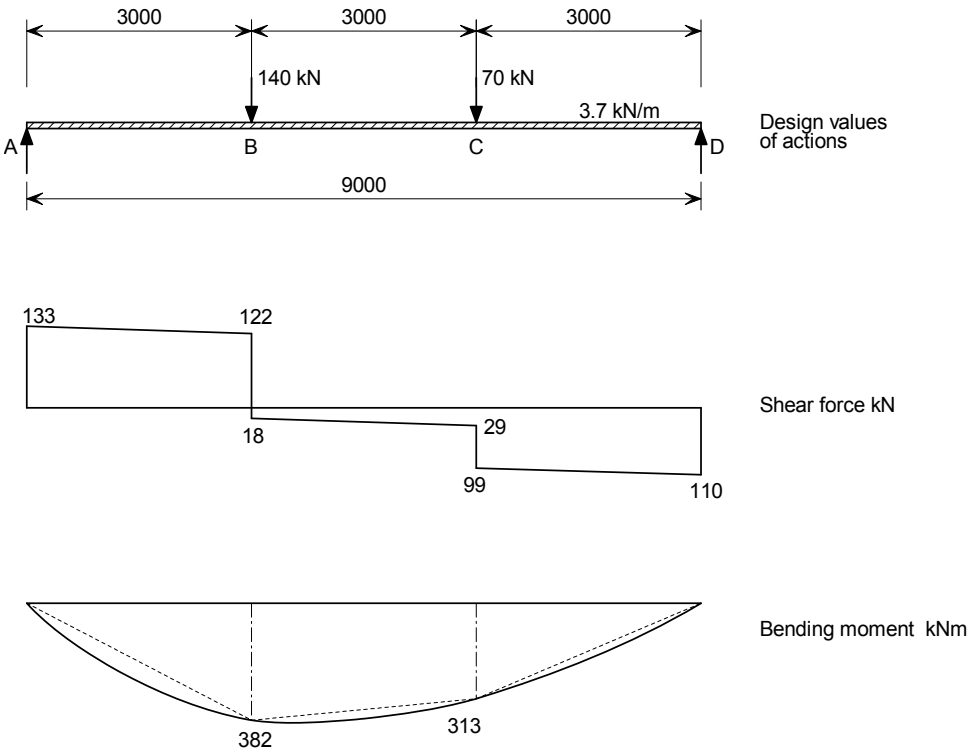

Figure 4.2

4.4 Buckling length (L_{cr})

Since the beam is restrained at its ends and at the loading points, there are three segments to consider. From the bending moment diagram, it can be seen that the maximum bending moment occurs within segment B to C. Therefore only this segment is considered.

BS EN 1993-1-1 does not give guidance for determining buckling lengths.

Therefore take the buckling length (L_{cr}) equal the span length between lateral restraints,

L_{cr} = 3000 mm

4.5 Section properties

An initial trial section is selected and verified to ensure its adequacy. If the initial size is inadequate, another section will be selected.

Try 457 × 191 × 82 UKB in S275

From section property tables: P363

Depth	h	= 460.0 mm
Width	b	= 191.3 mm
Web thickness	t_w	= 9.9 mm
Flange thickness	t_f	= 16.0 mm
Root radius	r	= 10.2 mm

Depth between fillets	d = 407.6 mm	
Second moment of area *y-y* axis	I_y = 37 100 cm^4	
Second moment of area *z-z* axis	I_z = 1 870 cm^4	
Warping constant	I_w = 0.922 dm^3	
Radius of gyration *y-y* axis	i_y = 18.8 cm	
Radius of gyration *z-z* axis	i_z = 4.23 cm	
Plastic modulus *y-y* axis	$W_{pl,y}$ = 1 830 cm^3	
Plastic modulus *z-z* axis	$W_{pl,z}$ = 304 cm^3	
Elastic modulus *y-y* axis	$W_{el,y}$ = 1 610 cm^3	
Elastic modulus *z-z* axis	$W_{el,z}$ = 196 cm^3	
Area	A = 104 cm^2	
Modulus of elasticity	E = 210 000 N/mm^2	3.2.6(1)

For buildings that will be built in the UK, the nominal values of the yield strength (f_y) and the ultimate strength (f_u) for structural steel should be those obtained from the product standard. Where a range is given, the lowest nominal value should be used. — NA.2.4

For S275 steel and $t \leq 16$ mm — BS EN 10025-2 Table 7

Yield strength $f_y = R_{eH} = 275$ N/mm^2

4.5.1 Cross section classification

Table 5.2

$$\varepsilon = \sqrt{\frac{235}{f_y}} = \sqrt{\frac{235}{275}} = 0.92$$

Outstand of compression flange

$$c = \frac{b - t_w - 2r}{2} = \frac{191.3 - 9.9 - (2 \times 10.2)}{2} = 80.50 \text{ mm}$$

$$\frac{c}{t_f} = \frac{80.5}{16.0} = 5.03$$

The limiting value for Class 1 is $\frac{c}{t_f} \leq 9\varepsilon = 9 \times 0.92 = 8.28$

$5.03 < 8.28$

Therefore, the flange in compression is Class 1

Web subject to bending

$c = d = 407.6$ mm

$$\frac{c}{t_w} = \frac{407.6}{9.9} = 41.17$$

The limiting value for Class 1 is $\frac{c}{t_f} \leq 72\varepsilon = 72 \times 0.92 = 66.24$

$41.17 < 66.24$

Therefore, the web is Class 1 under bending.

Therefore the section is Class 1 under bending.

4.6 Partial factors for resistance

$\gamma_{M0} = 1.0$ NA.2.15

$\gamma_{M1} = 1.0$

4.7 Cross-sectional resistance

4.7.1 Shear buckling resistance

The shear buckling resistance for webs should be verified according to Section 5 of BS EN 1993-1-5 if: 6.2.6(6)

$$\frac{h_w}{t_w} > 72\frac{\varepsilon}{\eta}$$ Eq (6.23)

$\eta = 1.0$ BS EN 1993-1-5 NA.2.4

$h_w = h - 2t_f = 460.0 - (2 \times 16.0) = 428.0\,\text{mm}$

$$\frac{h_w}{t_w} = \frac{428.0}{9.9} = 43.23$$

$$72\frac{\varepsilon}{\eta} = 72 \times \frac{0.92}{1.0} = 66.24$$

$43.23 < 66.24$

Therefore the shear buckling resistance of the web does not need to be verified.

4.7.2 Shear resistance

Verify that: 6.2.6(1) Eq (6.17)

$$\frac{V_{Ed}}{V_{c,Rd}} \leq 1.0$$

For Class 1 and 2 cross sections

$V_{c,Rd} = V_{pl,Rd}$

$$V_{pl,Rd} = \frac{A_v\,(f_y/\sqrt{3})}{\gamma_{M0}}$$ 6.2.6(2) Eq (6.18)

A_v is the shear area and is determined as follows for rolled I and H sections with the load applied parallel to the web.

$A_v = A - 2bt_f + t_f(t_w + 2r)$ but not less than $\eta h_w t_w$

$= 104 \times 10^2 - (2 \times 191.3 \times 16.0) + 16.0 \times (9.9 + (2 \times 10.2)) = 4763.2\ \text{mm}^2$

$\eta h_w t_w = 1.0 \times 428 \times 9.9 = 4237.20\ \text{mm}^2$

Therefore, $A_v = 4763.2\ \text{mm}^2$

The plastic design shear resistance is:

$$V_{\text{pl,Rd}} = \frac{A_{\text{v}}\,(f_{\text{y}}/\sqrt{3})}{\gamma_{\text{M0}}} = \frac{4763.2\times(275/\sqrt{3})}{1.0}\times 10^{-3} = 756 \text{ kN}$$

6.2.6(2)
Eq (6.18)

Maximum design shear occurs at A
$V_{\text{A,Ed}} = 133$ kN

Sheet 3

$$\frac{V_{\text{A,Ed}}}{V_{\text{c,Rd}}} = \frac{133}{756} = 0.18 < 1.0$$

Therefore the shear resistance of the section is adequate.

4.7.3 Resistance to bending

Verify that:

6.2.5(1)
Eq (6.12)

$$\frac{M_{\text{Ed}}}{M_{\text{c,Rd}}} \le 1.0$$

At the point of maximum bending moment (B) verify whether the shear force will reduce the bending moment resistance of the section.

$$\frac{V_{\text{c,Rd}}}{2} = \frac{756}{2} = 378 \text{ kN}$$

Shear force at maximum bending moment is $V_{\text{B,Ed}} = 122$ kN

Sheet 3
6.2.8(2)

122 kN < 378 kN

Therefore **no reduction** in bending resistance due to shear is required.

The design resistance for bending moment for Class 1 and 2 cross-sections is:

6.2.5(2)

$$M_{\text{c,Rd}} = M_{\text{pl,Rd}} = \frac{W_{\text{pl,y}} f_{\text{y}}}{\gamma_{\text{M0}}} = \frac{1830\times 10^{3}\times 275}{1.0}\times 10^{-6} = 503 \text{ kNm}$$

Eq (6.13)

$$\frac{M_{\text{B,Ed}}}{M_{\text{c,Rd}}} = \frac{382}{503} = 0.76 < 1.0$$

Eq (6.12)

Therefore the bending moment resistance is adequate.

4.8 Buckling resistance of member in bending

If the lateral torsional buckling slenderness ($\bar{\lambda}_{\text{LT}}$) is less than or equal to $\bar{\lambda}_{\text{LT,0}}$ the effects of lateral torsional buckling may be neglected, and only cross-sectional resistances apply.

6.3.2.2(4)

The value of $\bar{\lambda}_{\text{LT,0}}$ for rolled sections is given by the UK National Annex as
$\bar{\lambda}_{\text{LT,0}} = 0.4$

NA.2.17

$$\bar{\lambda}_{\text{LT}} = \sqrt{\frac{W_{\text{y}} f_{\text{y}}}{M_{\text{cr}}}}$$

6.3.2.2(1)

$W_{\text{y}} = W_{\text{pl,y}}$ For class 1 or 2 cross sections.

BS EN 1993-1-1 does not give a method for determining the elastic critical moment for lateral-torsional buckling (M_{cr}). Here a method presented in Access Steel document SN002 is used to determine a value for $\bar{\lambda}_{LT}$ without having to calculate M_{cr}.

Access Steel document SN002

Consider section B – C of the beam.

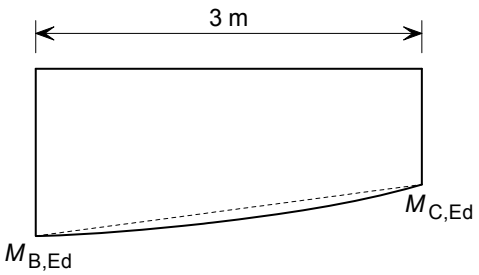

Figure 4.3

$$\bar{\lambda}_{LT} = \frac{1}{\sqrt{C_1}} UV\bar{\lambda}_z\sqrt{\beta_w}$$

Access Steel SN002

where:

$$U = \sqrt{\frac{W_{pl,y}\,g}{A}\sqrt{\frac{I_z}{I_w}}}$$

$$g = \sqrt{1-\frac{I_z}{I_y}} = \sqrt{1-\frac{1870}{37100}} = 0.97$$

$$U = \sqrt{\left(\frac{1830\times10^3\times0.97}{104\times10^2}\right)\times\sqrt{\frac{1870\times10^4}{0.922\times10^{12}}}} = 0.88$$

$$V = \frac{1}{\sqrt[4]{1+\frac{1}{20}\left(\frac{\lambda_z}{h/t_f}\right)^2}}$$ (For doubly symmetric sections)

$$\lambda_z = \frac{kL}{i_z}$$

k is the effective length parameter and should be taken as 1.0 unless it can be demonstrated otherwise. Therefore,

$$\lambda_z = \frac{L}{i_z} = \frac{3000}{42.3} = 70.92$$

$$V = \frac{1}{\sqrt[4]{1+\frac{1}{20}\left(\frac{70.92}{460/16}\right)^2}} = 0.94$$

$$\beta_w = \frac{W_y}{W_{pl,y}}$$

For Class 1 and 2 sections $W_y = W_{pl,y}$, therefore,

$$\beta_w = 1.0$$

$$\bar{\lambda}_z = \frac{\lambda_z}{\lambda_1}$$

$$\lambda_1 = \pi\sqrt{\frac{E}{f_y}} = \pi\sqrt{\frac{210000}{275}} = 86.8$$

$$\bar{\lambda}_z = \frac{70.92}{86.8} = 0.82$$

$\frac{1}{\sqrt{C_1}}$ is a factor that accounts for the shape of the bending moment diagram

$$\psi = \frac{M_{C,Ed}}{M_{B,Ed}} = \frac{313}{382} = 0.82$$

For the bending moment shape shown in Figure 4.3 and $\psi = 0.82$,

$$\frac{1}{\sqrt{C_1}} = 0.92$$

Access Steel document SN002 Table 2.1

$$\bar{\lambda}_{LT} = \frac{1}{\sqrt{C_1}} UV\bar{\lambda}_z\sqrt{\beta_w}$$

$$\bar{\lambda}_{LT} = 0.92 \times 0.88 \times 0.94 \times 0.82 \times \sqrt{1.0} = 0.62$$

$0.62 > 0.4\ (\bar{\lambda}_{LT,0})$ — 6.3.2.2(4)

Therefore, the resistance to lateral torsional buckling should be verified.

Verify that:

$$\frac{M_{Ed}}{M_{b,Rd}} \leq 1.0$$

6.3.2.1(1) Eq (6.54)

The design buckling resistance moment ($M_{b,Rd}$) of a laterally unrestrained beam is determined from: — 6.3.2.1(3) Eq (6.55)

$$M_{b,Rd} = \chi_{LT} W_y \frac{f_y}{\gamma_{M1}}$$

where:

W_y = $W_{pl,y}$ for Class 1 and 2 cross-sections

χ_{LT} is the reduction factor for lateral-torsional buckling.

For UKB sections, the method given in 6.3.2.3 for determining χ_{LT} for rolled sections may be used. Therefore,

$$\chi_{LT} = \frac{1}{\Phi_{LT} + \sqrt{\Phi_{LT}^2 - \beta\bar{\lambda}_{LT}^2}} \text{ but } \leq 1.0 \text{ and } \leq \frac{1}{\bar{\lambda}_{LT}^2}$$

6.3.2.3(1) Eq (6.57)

where:

$$\Phi_{LT} = 0.5\left(1 + \alpha_{LT}\left(\bar{\lambda}_{LT} - \bar{\lambda}_{LT,0}\right) + \beta\bar{\lambda}_{LT}^2\right)$$

From the UK National Annex $\bar{\lambda}_{LT,0} = 0.4$ and $\beta = 0.75$ — NA.2.17

The appropriate buckling curve depends on *h*/*b:*

$$\frac{h}{b} = \frac{460.0}{191.3} = 2.40$$

$2 < 2.40 < 3.1$, therefore use buckling curve '*c*' — NA.2.17

For buckling curve '*c*', $\alpha_{LT} = 0.49$ — NA.2.16 & Table 6.3

$$\Phi_{LT} = 0.5 \times \left(1 + 0.49 \times \left(0.62 - 0.4\right) + \left(0.75 \times 0.62^2\right)\right) = 0.70$$

6.3.2.3(1)

$$\chi_{LT} = \frac{1}{0.7 + \sqrt{0.7^2 - \left(0.75 \times 0.62^2\right)}} = 0.87$$

$$\frac{1}{\bar{\lambda}_{LT}^2} = \frac{1}{0.62^2} = 2.60$$

$0.87 < 1.0 < 2.60$

Therefore,

$\chi_{LT} = 0.87$

To account of the shape of the bending moment distribution, χ_{LT} may be modified as follows: — 6.3.2.3(2) Eq (6.58)

$$\chi_{LT,mod} = \frac{\chi_{LT}}{f} \text{ but } \chi_{LT,mod} \leq 1.0$$

$$f = 1 - 0.5\left(1 - k_c\right)\left[1 - 2\left(\bar{\lambda}_{LT} - 0.8\right)^2\right] \text{ but } f \leq 1.0$$

6.3.2.3(2)

$$k_c = \frac{1}{\sqrt{C_1}}$$

NA.2.18

Therefore,

$k_c = 0.92$ — Sheet 8

$$f = 1 - 0.5 \times \left(1 - 0.92\right) \times \left[1 - 2 \times \left(0.62 - 0.8\right)^2\right] = 0.96$$

6.3.2.3(2)

Therefore,

$$\chi_{LT,mod} = \frac{0.88}{0.96} = 0.92$$

Eq (6.58)

The design buckling resistance moment ($M_{b,Rd}$) of a laterally unrestrained beam is determined from:

$$M_{b,Rd} = \chi_{LT} W_y \frac{f_y}{\gamma_{M0}}$$ Eq (6.55)

where:

$$\chi_{LT} = \chi_{LT,mod}$$

For this beam:

$$M_{b,Rd} = 0.92 \times 1830 \times 10^3 \times \frac{275}{1.0} \times 10^{-6} = 463 \text{ kNm}$$

$$\frac{M_{B,Ed}}{M_{b,Rd}} = \frac{382}{463} = 0.83 < 1.0$$ 6.3.2.1(1) Eq (6.54)

Therefore the design buckling resistance of the member is adequate.

4.8.1 Resistance of the web to transverse forces

There is no need to verify the resistance of the web to transverse forces in this example, because the secondary beams are connected into the webs of the primary beams and flexible end plates are used to connect the beams to the columns.

4.9 Blue Book Approach

Page references in Section 4.9 are to P363 unless otherwise stated.

The design resistances may be obtained from SCI publication P363.

Consider the 457 × 191 × 82 UKB in S275

4.9.1 Design bending moments and shear forces

The design bending moment and shear forces are shown in Figure 4.2.

Maximum shear	$V_{A,Ed}$	= 133 kN
Shear at maximum bending moment	$V_{B,Ed}$	= 122 kN
Maximum bending moment	M_{Ed}	= 382 kNm

4.9.2 Cross section classification

Under bending the section in S275 is Class 1. Page C-67

4.9.3 Cross sectional resistance

Shear resistance

$V_{c,Rd}$ = 756 kN Page C-104

$$\frac{V_{Ed}}{V_{c,Rd}} = \frac{133}{756} = 0.18 < 1.0$$

Therefore the shear resistance is adequate

Bending resistance

$$\frac{V_{c,Rd}}{2} = \frac{756}{2} = 378 \text{ kN}$$

$$V_{B,Ed} = 122 \text{ kN} < 378 \text{ kN}$$

Therefore there is **no reduction** in the bending resistance.

$M_{c,y,Rd} = 504$ kNm — Page C-67

$$\frac{M_{Ed}}{M_{c,y,Rd}} = \frac{382}{504} = 0.76 < 1.0$$

Therefore the bending moment resistance is adequate

4.9.4 Member buckling resistance

$L_{cr} = 3.0$ m — Sheet 3

Consider span B – C.

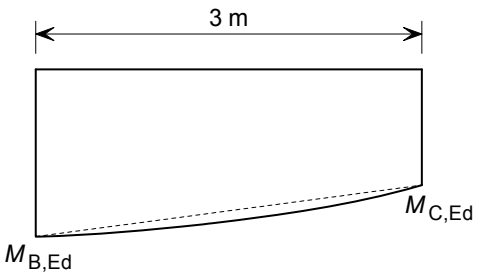

From Section 4.7 of this example

$$\frac{1}{\sqrt{C_1}} = 0.92$$ — Sheet 8

Therefore,

$$C_1 = \left(\frac{1}{0.92}\right)^2 = 1.18$$

From interpolation for $C_1 = 1.18$ and $L = 3$ m — Page C-67

$M_{b,Rd} = 449$ kNm

$$\frac{M_{Ed}}{M_{b,Rd}} = \frac{382}{449} = 0.85 < 1.0$$

Therefore the buckling resistance is adequate

References are to BS EN 1993-1-1: 2005, including its National Annex, unless otherwise stated.

5 Unrestrained beam with end bending moments using a Class 3 section

5.1 Scope

The beam shown in Figure 5.1 has moment resisting connections at its ends and carries a UDL and concentrated loads. The intermediate concentrated loads are applied through the bottom flange as shown below. These concentrated loads **do not** provide restraint against lateral-torsional buckling. Design the beam using a UKC in S355 steel.

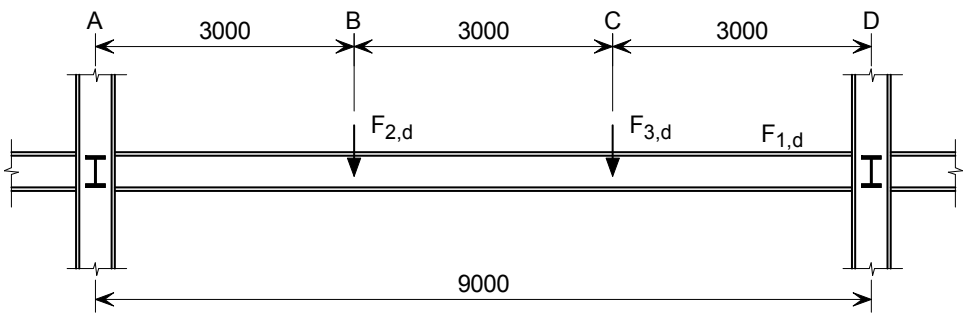

Figure 5.1

The design aspects covered in this example are:

- Section classification
- Cross sectional resistance:
  - Shear buckling
  - Shear
  - Bending moment
- Lateral torsional buckling resistance

Calculations for the verification of the vertical deflection of the beam under serviceability limit state loading are not given.

5.2 Design values of bending moments and shear forces

The design effects due to the combined actions shown in Figure 5.2 were calculated as follows:

Design bending moment at A $M_{A,Ed}$ = 330 kNm
Design bending moment at B $M_{B,Ed}$ = 320 kNm
Design bending moment at C $M_{C,Ed}$ = 250 kNm
Design bending moment at D $M_{D,Ed}$ = 280 kNm

Design shear force at A $V_{A,Ed}$ = 225 kN
Design shear force at D $V_{D,Ed}$ = 185 kN

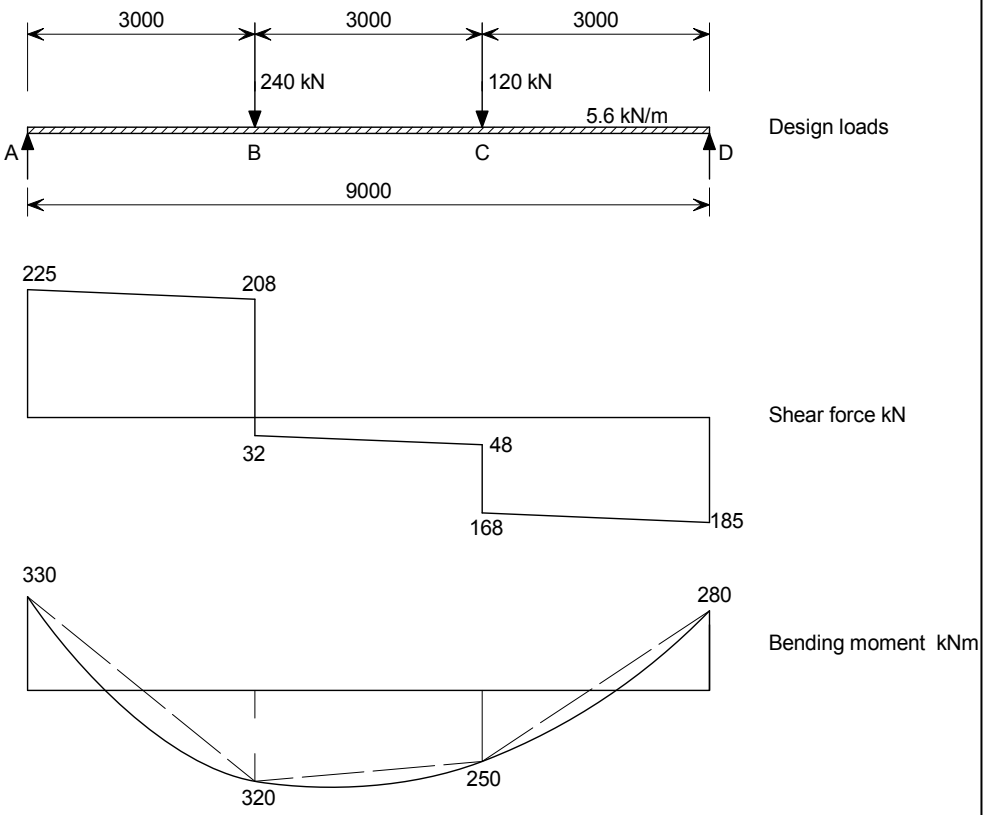

Figure 5.2

5.3 Buckling length (L_{cr})

Since the beam is unrestrained between the supports, there is only one segment to consider in this example, with a length equal to the beam length.

BS EN 1993-1-1 does not give guidance for determining buckling lengths. For beams, the buckling length should be taken as being equal to the span length unless the designer considers the beam to be restrained.

L_{cr} = 9.0 m

5.4 Section properties

305 × 305 × 97 UKC in S355 steel
From section property tables:

Depth	h	= 307.9 mm	P363
Width	b	= 305.3 mm	
Web thickness	t_w	= 9.9 mm	
Flange thickness	t_f	= 15.4 mm	
Root radius	r	= 15.2 mm	
Depth between fillets	d	= 246.7 mm	
Elastic modulus, y-y axis	$W_{el,y}$	= 1 450 cm^3	
Area	A	= 123 cm^2	
Modulus of elasticity	E	= 210 000 N/mm^2	3.2.6(1)

For buildings that will be built in the UK, the nominal values of the yield strength (f_y) and the ultimate strength (f_u) for structural steel should be those obtained from the product standard. Where a range is given, the lowest nominal value should be used. NA.2.4

For S355 steel and $t \leq 16$ mm
Yield strength $f_y = R_{eH} = 355$ N/mm^2 BS EN 10025-2 Table 7

5.4.1 Cross section classification

Table 5.2

$$\varepsilon = \sqrt{\frac{235}{f_y}} = \sqrt{\frac{235}{355}} = 0.81$$

Outstand of compression flange

$$c = \frac{b - t_w - 2r}{2} = \frac{305.3 - 9.9 - (2 \times 15.2)}{2} = 132.5 \text{ mm}$$

$$\frac{c}{t_f} = \frac{132.5}{15.4} = 8.6$$

The limiting value for Class 2 is $\frac{c}{t_f} \leq 10\varepsilon = 10 \times 0.81 = 8.1$

The limiting value for Class 3 is $\frac{c}{t_f} \leq 14\varepsilon = 14 \times 0.81 = 11.3$

$8.1 < 8.6 < 11.3$

Therefore, the flange in compression is Class 3

Web subject to bending

$c = d = 246.7$ mm

$$\frac{c}{t_w} = \frac{246.7}{9.9} \quad 24.92$$

The limiting value for Class 1 is $\frac{c}{t_f} \leq 72\varepsilon = 72 \times 0.81 = 58.32$

$24.92 < 58.32$

Therefore, the web is Class 1 under bending.

Therefore the section is Class 3 under bending.

5.5 Partial factors for resistance

$\gamma_{M0} = 1.0$ NA.2.15

$\gamma_{M1} = 1.0$

5.6 Cross-sectional resistance

5.6.1 Shear buckling

The shear buckling resistance for webs should be verified according to Section 5 of BS EN 1993-1-5 if: 6.2.6(6)

$$\frac{h_w}{t_w} > 72\frac{\varepsilon}{\eta}$$ Eq (6.23)

$\eta = 1.0$ BS EN 1993-1-5 NA.2.4

$h_w = h - 2t_f = 307.9 - (2 \times 15.4) = 277.1\,\text{mm}$

$$\frac{h_w}{t_w} = \frac{277.1}{9.9} = 27.99$$

$$72\frac{\varepsilon}{\eta} = 72 \times \frac{0.81}{1.0} = 58.32$$

$27.99 < 58.32$

Therefore the shear buckling resistance of the web does not need to be verified.

5.6.2 Shear resistance

Verify that: 6.2.6(1)

$$\frac{V_{Ed}}{V_{c,Rd}} \leq 1.0$$ Eq (6.17)

$V_{c,Rd}$ is equal to the design plastic shear resistance ($V_{pl,Rd}$).

$$V_{pl,Rd} = \frac{A_v\,(f_y/\sqrt{3})}{\gamma_{M0}}$$

A_v is the shear area and is determined as follows for rolled I and H sections with the load applied parallel to the web.

$A_v = A - 2bt_f + t_f(t_w + 2r)$ but not less than $\eta h_w t_w$

$= 123 \times 10^2 - (2 \times 305.3 \times 15.4) + 15.4 \times (9.9 + (2 \times 15.2)) = 3517.38\ \text{mm}^2$

$\eta h_w t_w = 1.0 \times 276.8 \times 9.9 = 2740.32 \text{ mm}^2$

$2740.31 \text{ mm}^2 < 3517.38 \text{ mm}^2$

Therefore, $A_v = 3517.38 \text{ mm}^2$

The plastic design shear resistance is:

$$V_{c,Rd} = V_{pl,Rd} = \frac{A_v (f_y / \sqrt{3})}{\gamma_{M0}} = \frac{3517.38 \times \left(355/\sqrt{3}\right)}{1.0} \times 10^{-3} = 721 \text{ kN}$$

6.2.6(2)
Eq (6.18)

Maximum design shear occurs at A, therefore the design shear
$V_{Ed} = V_{A,Ed} = 225$ kN

Sheet 2

$$\frac{V_{Ed}}{V_{c,Rd}} = \frac{225}{721} = 0.31 < 1.0$$

Therefore the shear resistance of the section is adequate.

5.6.3 Resistance to bending

Verify that:

6.2.5(1)
Eq (6.12)

$$\frac{M_{A,Ed}}{M_{c,Rd}} \leq 1.0$$

At the point of maximum bending moment (A) check if the shear force will reduce the bending moment resistance of the section.

$$\frac{V_{c,Rd}}{2} = \frac{721}{2} = 360.5 \text{ kN}$$

Shear force at maximum bending moment $V_{A,Ed,} = 225$ kN

$225 \text{ kN} < 360.5 \text{ kN}$

Therefore **no reduction** in bending resistance due to shear is required. 6.2.8(2)

The design resistance for bending for Class 3 cross-sections is: 6.2.5(2)

$$M_{c,Rd} = M_{el,Rd} = \frac{W_{el,y} f_y}{\gamma_{M0}} = \frac{1450 \times 10^3 \times 355}{1.0} \times 10^{-6} = 515 \text{ kNm}$$

Eq (6.14)

$$\frac{M_{A,Ed}}{M_{c,Rd}} = \frac{330}{515} = 0.64 < 1.0$$

Eq (6.12)

Therefore the bending resistance of the cross section is adequate.

5.7 Buckling resistance of member in bending

If the lateral torsional buckling slenderness ($\bar{\lambda}_{LT}$) is less than or equal to $\bar{\lambda}_{LT,0}$ the effects of lateral torsional buckling may be neglected, and only cross-sectional resistances apply. 6.3.2.2(4)

The value of $\bar{\lambda}_{LT,0}$ for rolled sections is given as $\bar{\lambda}_{LT,0} = 0.4$ NA.2.17

$$\bar{\lambda}_{LT} = \sqrt{\frac{W_y f_y}{M_{cr}}}$$ 6.3.2.2(1)

$W_y = W_{el,y}$ For class 3 cross sections.

BS EN 1993-1-1 does not give a method for determining the elastic critical moment for lateral-torsional buckling (M_{cr}). Here the '*LTBeam*' software (which can be downloaded from the CTICM website) has been used to determine M_{cr}.

When determining M_{cr} the following end restraint conditions have been applied to the beam.

***LTBeam* symbol**	**Definition**	**Restraint applied (fixed/free)**
v	Lateral restraint	Fixed
θ	Torsional restraint	Fixed
v'	Flexural restraint	Free
θ'	Warping restraint	Free

The value for the elastic critical moment obtained from '*LTBeam*' is:

M_{cr} = 607.7 kNm

Therefore,

$$\bar{\lambda}_{LT} = \sqrt{\frac{1450 \times 10^3 \times 355}{607.7 \times 10^6}} = 0.92$$

$0.92 > 0.4$

Therefore the resistance to lateral-torsional buckling must be verified. 6.3.2.2(4)

Verify that:

$$\frac{M_{Ed}}{M_{b,Rd}} \leq 1.0$$ 6.3.2.1(1) Eq (6.54)

The design buckling resistance moment ($M_{b,Rd}$) of a laterally unrestrained beam is determined from: 6.3.2.1(3) Eq (6.55)

$$M_{b,Rd} = \chi_{LT} W_y \frac{f_y}{\gamma_{M1}}$$

where:

$W_y = W_{el,y}$ for class 3 cross sections.

χ_{LT} is the reduction factor for lateral-torsional buckling

For UKC sections the method given in 6.3.2.3 for determining χ_{LT} for rolled sections may be used. Therefore,

$$\chi_{LT} = \frac{1}{\Phi_{LT} + \sqrt{\Phi_{LT}^2 - \beta \bar{\lambda}_{LT}^2}} \quad \text{but} \leq 1.0 \text{ and} \leq \frac{1}{\bar{\lambda}_{LT}^2}$$ 6.3.2.3(1) Eq (6.57)

where:

$$\Phi_{LT} = 0.5 \times \left[1 + \alpha_{LT}\left(\bar{\lambda}_{LT} - \bar{\lambda}_{LT,0}\right) + \beta \bar{\lambda}_{LT}^{2}\right]$$

From the UK National Annex $\bar{\lambda}_{LT,0} = 0.4$ and $\beta = 0.75$ — NA.2.17

The appropriate buckling curve depends on *h*/*b:*

$$\frac{h}{b} = \frac{307.9}{305.3} = 1.01$$

1.01 < 2, therefore use buckling curve *'b'* — NA.2.17

For buckling curve *'b'*, $\alpha_{LT} = 0.34$ — NA.2.16 & Table 6.5

$$\Phi_{LT} = 0.5 \times \left[1 + 0.34 \times (0.92 - 0.4) + \left(0.75 \times 0.92^{2}\right)\right] = 0.91$$ — 6.3.2.3(1)

$$\chi_{LT} = \frac{1}{0.91 + \sqrt{0.91^{2} - \left(0.75 \times 0.92^{2}\right)}} = 0.74$$

$$\frac{1}{\bar{\lambda}_{LT}^{2}} = \frac{1}{0.92^{2}} = 1.18$$

0.74 < 1.0 < 1.18

Therefore,

$$\chi_{LT} = 0.74$$

To account for the shape of the bending moment distribution, χ_{LT} may be modified by the use of a factor '*f*'. — 6.3.2.3(2)

$$\chi_{LT,mod} = \frac{\chi_{LT}}{f} \text{ but } \chi_{LT,mod} \le 1.0$$ — Eq (6.58)

where:

$$f = 1 - 0.5(1 - k_{c})\left[1 - 2\left(\bar{\lambda}_{LT} - 0.8\right)^{2}\right] \text{ but } f \le 1.0$$ — 6.3.2.3(2)

$$k_{c} = \frac{1}{\sqrt{C_1}}$$ — NA.2.18

C_1 may be obtained from either tabulated data given in NCCI, such as Access Steel document SN003, or determined from:

$$C_1 = \frac{M_{cr}(\text{actual bending moment diagram})}{M_{cr}(\text{uniform bending moment diagram})}$$

As a value for C_1 for the bending moment diagram given in Figure 5.2 is not given in the Access Steel document SN003 the value for C_1 will be calculated.

Applying a uniform bending moment to the beam, the value of M_{cr} determined from the *'LTBeam'* software is:

$$M_{cr} = 460.5 \text{ kNm}$$

$$C_1 = \frac{607.7}{460.5} = 1.32$$

$$k_c = \frac{1}{\sqrt{1.32}} = 0.87$$

$$f = 1 - 0.5 \times (1 - 0.87) \times \left[1 - 2 \times (0.92 - 0.8)^2\right] = 0.94$$ 6.3.2.3(2)

$$\chi_{LT,mod} = \frac{0.74}{0.94} = 0.79$$ Eq (6.58)

The design buckling resistance moment ($M_{b,Rd}$) of a laterally unrestrained beam is determined from:

$$M_{b,Rd} = \chi_{LT} W_y \frac{f_y}{\gamma_{M1}}$$ Eq (6.55)

where:

$$\chi_{LT} = \chi_{LT,mod}$$

For this beam $M_{b,Rd} = 0.79 \times 1450 \times 10^3 \times \frac{355}{1.0} \times 10^{-6} = 407$ kNm

$$\frac{M_{A,Ed}}{M_{b,Rd}} = \frac{330}{407} = 0.81 < 1.0$$ Sheet 2 6.3.2.1(1) Eq (6.54)

Therefore the design buckling resistance of the member is adequate.

5.8 Web subject to transverse forces

The verification for web subject to transverse forces should be carried out at the supports and at the points of load application. However, as the reactions are transferred through end plates and the loads are applied through the bottom flange, there is no need to verify the resistance of the web to transverse forces in this example.

5.9 Blue Book Approach

Page references given in Section 5.9 are to P363 unless otherwise stated.

The design resistances may be obtained from SCI publication P363.

Consider the 305 × 305 × 97 UKC in S355

5.9.1 Design bending moments and shear forces

The design bending moments and shear forces are shown in Figure 5.2

Design bending moment at A	$M_{A,Ed}$	= 330 kNm
Design bending moment at B	$M_{B,Ed}$	= 320 kNm
Maximum design shear force (at A)	$V_{A,Ed}$	= 225 kN

5.9.2 Cross-section classification

Under bending the section is Class 3. Page D-76

5.9.3 Cross sectional resistance

Shear resistance

$V_{c,Rd} = 721$ kN — Page D-110

$$\frac{V_{A,Ed}}{V_{c,Rd}} = \frac{225}{721} = 0.31 < 1.0$$

Therefore the shear resistance is adequate

Bending resistance

$$\frac{V_{c,Rd}}{2} = \frac{721}{2} = 360.5 \text{ kN}$$

$V_{A,Ed} = 225 \text{ kN} < 360.5 \text{ kN}$

Therefore there is **no reduction** in bending resistance.

$M_{c,y,Rd} = 513$ kNm — Page D-76

$$\frac{M_{Ed}}{M_{c,y,Rd}} = \frac{330}{513} = 0.64 < 1.0$$

Therefore the bending resistance is adequate

5.9.4 Member buckling resistance

From Section 5.6 of this example

$C_1 = 1.32$ — Sheet 8

From interpolation for $C_1 = 1.32$ and $L = 9.0$ m — Page D-76

$M_{b,Rd} = 406$ kNm

$$\frac{M_{A,Ed}}{M_{b,Rd}} = \frac{330}{406} = 0.81 < 1.0$$

Therefore the buckling resistance is adequate

6 Beam under combined bending and torsion – Simple method

References are to BS EN 1993-1-1: 2005, including its National Annex, unless otherwise stated.

6.1 Scope

The simply supported (but with torsionally restraining end plate connections at each ends) beam (254 × 254 × 89 UKC) shown in Figure 6.1 is unrestrained along its length. An eccentric load is applied to the bottom flange at the centre of the span in such a way that it does not provide any lateral restraint to the member. The end conditions are considered to be simply supported for bending and fixed against torsion, but free for warping. For the load shown, verify the resistance of the beam in S275 steel.

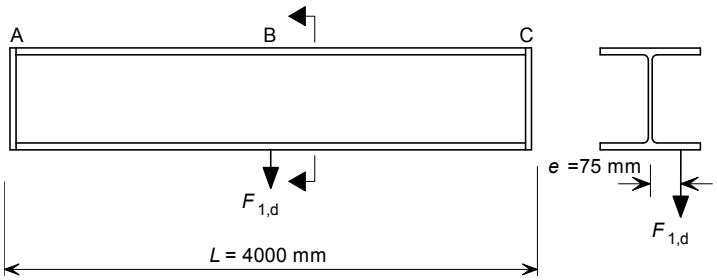

Figure 6.1

The design aspects covered in this example are:

- Deflections and twist at SLS
- Cross section classification
- Cross-sectional resistance (bending about *y-y* axis):
  - Shear buckling
  - Shear
  - Bending moment
- Buckling resistance in bending
- Resistance to combined bending and torsion
  - Cross-sectional resistance
  - Buckling resistance.

A complete and exhaustive method on combined bending and torsion is given in SCI publication P385. However, the following simplified method may be used for I and H-sections subject to combined bending and torsion. The method has been used in practice in building design for many years. It ignores the pure St Venant stiffness of the beam and the small component of the major axis bending moment that is applied as a minor axis bending moment due to

the twist of the section. The beam is then verified using the principles of 6.3.3 in BS EN 1993-1-1 with the axial force taken as zero.

6.2 Actions

Replace the applied actions (Figure 6.1) by an equivalent arrangement, comprising a vertical force applied through the shear centre and a torsional moment as shown in Figure 6.2.

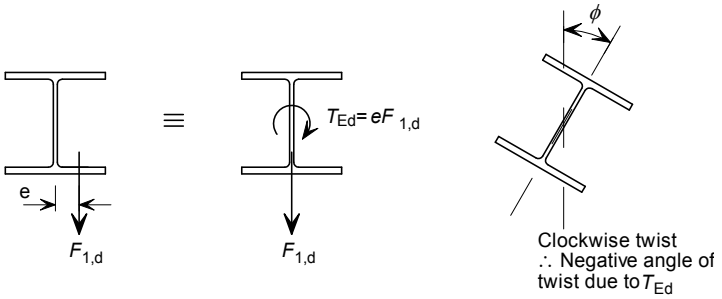

Figure 6.2

The application of the force $F_{1,d}$ and torsion T_{Ed} are shown below.

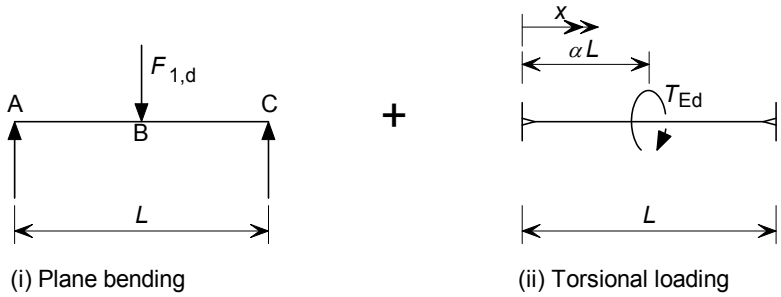

Figure 6.3

6.2.2 Permanent actions

Uniformly distributed load (self-weight) g_k = 0.9 kN/m

6.2.3 Variable actions

Concentrated load Q_k = 60 kN

6.2.4 Partial factors for actions

For the design of structural members not involving geotechnical actions the partial factors for actions to be used for ultimate limit state design should be obtained from Table A1.2(B). — BS EN 1990 A1.3.1(4)

Partial factor for permanent actions γ_G = 1.35 — Table NA.A1.2(B)

Partial factor for variable actions γ_Q = 1.50

Reduction factor ξ = 0.925

Note: for this example the combination coefficient (ψ_0) is not required as there is only one variable action.

6.3 Design values of combined actions

6.3.1 Values at ULS

In accordance with equation 6.10b:

UDL (self weight)

$F_{2,d} = \xi\gamma_G g_k = (0.925 \times 1.35 \times 0.9) = 1.12$ kN/m

Concentrated load

$F_{1,d} = \gamma_Q Q_k = (1.5 \times 60) = 90.0$ kN

The concentrated load acts at an eccentricity of 75 mm from the centreline of the beam. The design force is equivalent to a concentric force plus a torsional moment, given by:

$T_{Ed} = F_{1,d} \times e = 90 \times 0.075 = 6.75$ kNm

6.3.2 *Force in flanges due to torsion*

In this simplified method, the torsional moment is considered as two equal and opposite lateral forces applied to the flanges as shown below.

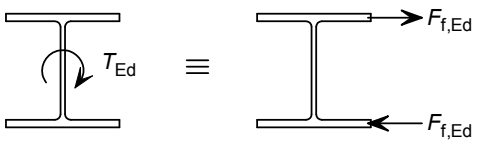

Figure 6.4

The force $F_{f,Ed}$, acting at each flange, is given by:

$$F_{f,Ed} = \frac{T_{Ed}}{h - t_f} = \frac{6.75}{(260.3 - 17.3) \times 10^{-3}} = 27.8 \text{ kN}$$

6.3.3 Values at SLS

The SLS value of the concentrated load is:

$F_{1,d,ser} = Q = 60.0$ kN

The force at each flange at SLS is therefore:

$$F_{f,Ed,ser} = \frac{T_{Ed,ser}}{h - t_f} = \frac{60 \times 0.075}{(260.3 - 17.3) \times 10^{-3}} = 18.5 \text{ kN}$$

6.4 Design bending moment and shear forces at Ultimate Limit State

Design bending moment at B	$M_{y,Ed}$ = 92 kNm
Design shear force at supports (A and C)	$V_{A,Ed}$ & $V_{C,Ed}$ = 47 kN
Design shear force at mid-span (B)	$V_{B,Ed}$ = 47 kN

6.5 Buckling length

Since the beam is unrestrained between the supports, there is only one segment length to consider in this example, with a length equal to the beam length. In bending, the beam is simply supported.

BS EN 1993-1-1 does not give guidance for determining buckling lengths. For beams, the buckling length should be taken as being equal to the span length unless the designer considers the beam to be restrained.

Length to consider, $L = 4000$ mm

Therefore, $L_{cr} = 1.0 \times L = 4000$ mm

6.6 Section properties

254 × 254 × 89 UKC in S275 steel

From section property tables:

Depth	h	= 260.3 mm	P363
Width	b	= 256.3 mm	
Web thickness	t_w	= 10.3 mm	
Flange thickness	t_f	= 17.3 mm	
Depth between fillets	d	= 200.3 mm	
Root radius	r	= 12.7 mm	
Plastic modulus *y-y* axis	$W_{pl,y}$	= 1 220 cm^3	
Elastic modulus *y-y* axis	$W_{el,y}$	= 1 100 cm^3	
Radius of gyration *z-z* axis	i_z	= 6.55 cm	
Torsion constant	I_T	= 102 cm^4	
Area	A	= 113 cm^2	
Modulus of elasticity	E	= 210 000 N/mm^2	3.2.6(1)

For buildings that will be built in the UK, the nominal values of the yield strength (f_y) and the ultimate strength (f_u) for structural steel should be those obtained from the product standard. Where a range is given, the lowest nominal value should be used. — NA.2.4

For grade S275 steel and 16 mm $< t \leq 40$ mm — BS EN 10025-2 Table 7

Yield strength $f_y = R_{eH} = 265$ N/mm^2

6.7 Deflections and twist at SLS

Before carrying out the resistance verifications, it is advisable to verify the acceptability of the deflection and twist of the section under serviceability limit state loading.

The vertical deflection of the beam should be determined using the method given in Example 2 using the SLS loads. For brevity the calculation is not given here.

The twist of the beam is determined from the horizontal displacement of the flanges.

Considering one flange, the inertia of a single flange, I_f,is given by:

$$I_f = \frac{t_f \times b^3}{12} = \frac{17.3 \times 256.3^3}{12} \times 10^{-4} = 2427.2 \text{ cm}^4$$

The horizontal displacement, u, of the flanges is:

$$u = \frac{F_{f,Ed,ser} L^3}{48 EI_f} = \frac{18.5 \times 10^3 \times 4000^3}{48 \times 210000 \times 2427.2 \times 10^4} = 4.8 \text{ mm}$$

Therefore the maximum twist is

$$\phi = \left(\frac{2u}{h - t_f}\right) = \left(\frac{2 \times 4.8}{260.3 - 17.3}\right) = 0.04 \text{ radians} = 2.3°$$

This twist is greater than the suggested limit of 2.0° given in SCI publication P385. However, if the more rigorous approach given in P385 is used a twist of 1.26° is determined. Therefore, this example will continue to use the 254 × 254 × 89 UKC in S275 steel.

The twist is in addition to any rotations due to the movement of the connections or deflections of the supporting structure.

6.8 Cross section classification

$$\varepsilon = \sqrt{\frac{235}{f_y}} = \sqrt{\frac{235}{265}} = 0.94$$ Table 5.2

Outstand of compression flange Table 5.2

$$c = \frac{b - t_w - 2r}{2} = \frac{256.3 - 10.3 - (2 \times 12.7)}{2} = 110.3 \text{ mm}$$

$$\frac{c}{t_f} = \frac{110.3}{17.3} = 6.4$$

The limiting value for Class 1 is $\frac{c}{t_f} \leq 9\varepsilon = 9 \times 0.94 = 8.46$

$6.4 < 8.46$

Therefore, the flange in compression is Class 1.

Web subject to bending

$c = d = 200.3$ mm

$$\frac{c}{t_w} = \frac{200.3}{10.3} = 19.4$$

The limiting value for Class 1 is $\frac{c}{t_w} \leq 72\varepsilon = 72 \times 0.94 = 67.7$

$19.4 < 67.7$

Therefore, the web in bending is Class 1.

Therefore the cross section is Class 1.

6.9 Partial factors for resistance

$\gamma_{M0} = 1.0$ NA.2.15

$\gamma_{M1} = 1.0$

6.10 Cross-sectional resistance

6.10.1 Shear buckling

The shear buckling resistance for webs should be verified according to section 5 of BS EN 1993-1-5 if: 6.2.6(6)

$$\frac{h_w}{t_w} > 72\frac{\varepsilon}{\eta}$$ Eq (6.23)

$\eta = 1.0$ (conservative)

$h_w = h - 2t_f = 260.3 - (2 \times 17.3) = 225.7$ mm

$$\frac{h_w}{t_w} = \frac{225.7}{10.3} = 21.9$$

$$72\frac{\varepsilon}{\eta} = 72 \times \frac{0.94}{1.0} = 67.7$$

$21.9 < 67.7$

Therefore the shear buckling resistance of the web does not need to be verified.

6.10.2 Shear resistance

Verify that: 6.2.6(1)

$$\frac{V_{Ed}}{V_{c,Rd}} \leq 1.0$$ Eq (6.17)

$V_{c,Rd}$ is equal to the design plastic shear resistance ($V_{pl,Rd}$).

A_v is the shear area and is determined as follows for rolled I and H sections with the load applied parallel to the web:

$A_v = A - 2bt_f + t_f(t_w + 2r)$ but not less than $\eta h_w t_w$

$= 113 \times 10^2 - (2 \times 256.3 \times 17.3) + 17.3 \times (10.3 + (2 \times 12.7)) = 3049.6$ mm^2

$\eta h_w t_w = 1.0 \times 225.7 \times 10.3 = 2324.7$ mm^2

2324.7 mm^2 < 3049.6 mm^2

Therefore, $A_v = 3049.6$ mm^2

Therefore the design plastic shear resistance is:

$$V_{c,Rd} = V_{pl,Rd} = \frac{A_v(f_y/\sqrt{3})}{\gamma_{M0}} = \frac{3049.6 \times (265/\sqrt{3})}{1.0} \times 10^{-3} = 467 \text{ kN}$$ 6.2.6(2) Eq (6.18)

From Sheet 3, the maximum design shear is — Sheet 3

$V_{Ed} = 47.0$ kN

$$\frac{V_{Ed}}{V_{c,Rd}} = \frac{47}{467} = 0.10 < 1.0$$

Therefore the shear resistance of the section is adequate.

6.10.3 Resistance to bending

Verify that: — 6.2.5(1)

$$\frac{M_{y,Ed}}{M_{c,Rd}} \leq 1.0$$ — Eq (6.12)

As the shear at maximum bending moment $V_{B,Ed}$ is the same as the maximum shear and $\frac{V_{Ed}}{V_{c,Rd}} = 0.10 < 0.5$ **no reduction** in bending moment resistance due to shear is required.

The design resistance for bending for Class 1 and 2 cross sections is: — 6.2.5(2)

$$M_{c,Rd} = M_{pl,Rd} = \frac{W_{pl,y} f_y}{\gamma_{M0}} = \frac{1220 \times 10^3 \times 265}{1.0} \times 10^{-6} = 323 \text{ kNm}$$ — Eq (6.13)

$$\frac{M_{Ed}}{M_{c,Rd}} = \frac{92}{323} = 0.29 < 1.0$$

Therefore the resistance of the cross section to bending is adequate.

6.11 Buckling resistance in bending

Verify that: — 6.3.2.1(1)

$$\frac{M_{Ed}}{M_{b,Rd}} \leq 1.0$$ — Eq (6.54)

The design buckling resistance moment is determined from: — 6.3.2.1(3)

$$M_{b,Rd} = \chi_{LT} W_y \frac{f_y}{\gamma_{M1}}$$ — Eq (6.55)

$W_y = W_{pl,y}$ for Class 1 and 2 cross-sections

As a UKC is being considered, the method given in 6.3.2.3 for determining the reduction factor for lateral-torsional buckling (χ_{LT}) of rolled sections is used.

$$\chi_{LT} = \frac{1}{\Phi_{LT} + \sqrt{\Phi_{LT}^2 - \beta \bar{\lambda}_{LT}^2}} \text{ but} \leq 1.0 \text{ and} \leq \frac{1}{\bar{\lambda}_{LT}^2}$$ — 6.3.2.3(1) Eq (6.57)

where:

$\Phi_{LT} = 0.5(1 + \alpha_{LT}(\bar{\lambda}_{LT} - \bar{\lambda}_{LT,0}) + \beta\bar{\lambda}_{LT}^2)$

$\bar{\lambda}_{LT,0} = 0.4$ and $\beta = 0.75$ — NA.2.17

$$\bar{\lambda}_{LT} = \sqrt{\frac{W_y f_y}{M_{cr}}}$$ — 6.3.2.2(1)

BS EN 1993-1-1 does not give a method for determining M_{cr}. However, the conservative method given in SCI publication P362 allows a value for $\bar{\lambda}_{LT}$ to be determined directly without having to calculate M_{cr}. That method is used here.

$$\bar{\lambda}_{LT} = \frac{1}{\sqrt{C_1}} 0.9\bar{\lambda}_z\sqrt{\beta_w}$$ — P362 5.6.2.1(5)

As the self weight of the section is negligible compared with the point load, it may be ignored when determining $\frac{1}{\sqrt{C_1}}$

Therefore, $\frac{1}{\sqrt{C_1}} = 0.86$ — P362 Table 5.5

$$\bar{\lambda}_z = \frac{L_c}{i_z}\frac{1}{\lambda_1}$$ — P362 5.6.2.1(5)

L_c is the distance between lateral restraints, therefore $L_c = 4.0$ m

$\lambda_1 = 86$ for grade S275 Steel — P362 Table 5.2

$$\beta_w = \frac{W_y}{W_{pl,y}}$$

Where $W_y = W_{pl,y}$ for Class 1 and 2 cross-sections

Here the UKC considered is Class 1, therefore $\beta_w = 1.0$

$$\bar{\lambda}_z = \frac{L_c}{i_z}\frac{1}{\lambda_1} = \frac{4000}{65.5}\times\frac{1}{86} = 0.71$$

$$\bar{\lambda}_{LT} = \frac{1}{\sqrt{C_1}} 0.9\bar{\lambda}_z\sqrt{\beta_w} = 0.86 \times 0.9 \times 0.71 \times \sqrt{1} = 0.55$$

If $\bar{\lambda}_{LT} \leq \bar{\lambda}_{LT,0}$ lateral torsional buckling effects may be neglected. — 6.3.2.2(4)

As $0.55 > 0.4$ the lateral torsional buckling resistance should be verified.

The appropriate buckling curve depends on h/b: — NA.2.17

$$\frac{h}{b} = \frac{260.3}{256.3} = 1.02$$

$1.02 < 2$, therefore use buckling curve *'b'* — NA.2.17

For buckling curve *'b'* $\alpha_{LT} = 0.34$ — NA.2.16 & Table 6.5

$\Phi_{LT} = 0.5(1 + \alpha_{LT}(\bar{\lambda}_{LT} - \bar{\lambda}_{LT,0}) + \beta\bar{\lambda}_{LT}^2)$ — 6.3.2.3(1)

$\Phi_{LT} = 0.5 \times (1 + 0.34 \times (0.55 - 0.4) + (0.75 \times 0.55^2)) = 0.64$

$$\chi_{LT} = \frac{1}{\Phi_{LT} + \sqrt{\Phi_{LT}^2 - \beta\bar{\lambda}_{LT}^2}}$$ — Eq (6.57)

$$\chi_{LT} = \frac{1}{0.64 + \sqrt{0.64^2 - (0.75 \times 0.55^2)}} = 0.94$$

$$\frac{1}{\bar{\lambda}_{LT}^2} = \frac{1}{0.55^2} = 3.31$$

$0.94 < 1.0 < 3.31$ — 6.3.2.3(2)

Therefore,

$\chi_{LT} = 0.94$ — Eq (6.58)

To account for the bending moment distribution, χ_{LT} may be modified as follows:

$$\chi_{LT,mod} = \frac{\chi_{LT}}{f} \text{ but } \chi_{LT,mod} \leq 1.0$$

$f = 1 - 0.5(1 - k_c)[1 - 2(\bar{\lambda}_{LT} - 0.8)^2]$ but $f \leq 1.0$ — 6.3.2.3(2)

$$k_c = \frac{1}{\sqrt{C_1}}$$ — NA.2.18

$$\frac{1}{\sqrt{C_1}} = 0.86$$ — Sheet 8

$f = 1 - 0.5 \times (1 - 0.86) \times [1 - 2 \times (0.55 - 0.8)^2] = 0.94 < 1.0$

Therefore, — Eq (6.58)

$$\chi_{LT,mod} \frac{0.94}{0.94} = 1.0 \text{, but } \chi_{LT,mod} \leq 1.0$$

Therefore,

$\chi_{LT,mod} = 1.0$

$$M_{b,Rd} = \chi_{LT,mod} W_y \frac{f_y}{\gamma_{M0}}$$ — Eq (6.55)

$W_y = W_{pl,y}$ for Class 1 or 2 cross sections

$$M_{b,Rd} = 1 \times 1220 \times 10^3 \times \frac{265}{1.0} \times 10^{-6} = 323 \text{ kNm}$$

$$\frac{M_{y,Ed}}{M_{b,Rd}} = \frac{92}{323} = 0.29 < 1.0$$ — Eq (6.54)

Therefore the lateral-torsional buckling resistance is adequate.

6.12 Resistance to combined bending and torsion

6.12.1 Cross sectional resistance

Verify that:

$$\left(\frac{M_{\text{Ed}}}{M_{\text{c,Rd}}}\right)^{\alpha} + \left(\frac{M_{\text{f,Ed}}}{M_{\text{f,Rd}}}\right)^{\beta} \leq 1.0$$

Based on Eq (6.41)

$\alpha = 1.0$ and $\beta = 1.0$ (conservative) — 6.2.9.1(6)

where:

$M_{\text{Ed}} = M_{\text{y,Ed}} = 92$ kNm — Sheet 3

$M_{\text{c,Rd}} = 323$ kNm — Sheet 9

$M_{\text{f,Ed}}$ is the maximum bending moment in the flange due to the lateral flange force

$M_{\text{f,Rd}}$ is the lateral bending resistance of the flange.

Lateral bending of flange

The flange force is applied at the mid-span of the beam (at the same location as the applied torque). Since the flanges are free to rotate on plan at the supports, the maximum bending moment in the flange due to the lateral flange force is given by:

$$M_{\text{f,Ed}} = \frac{F_{\text{f,Ed}} L}{4} = \frac{27.8 \times 4}{4} = 27.8 \text{ kNm}$$

The resistance to bending of a class 1 flange is:

$$M_{\text{f,Rd}} = \frac{W_{\text{pl,y}} f_{\text{f}}}{\gamma_{\text{M0}}}$$

Where W_{pl} is the plastic modulus of the flange about its major axis (minor axis of the beam).

$$W_{\text{pl,y}} = \frac{t_{\text{f}} b^2}{4} = \frac{17.3 \times 256.3^2}{4} = 284.1 \times 10^3 \text{ mm}^3$$

$$M_{\text{f,Rd}} = \frac{W_{\text{pl,y}} f_{\text{y}}}{\gamma_{\text{M0}}} = \frac{284.1 \times 10^3 \times 265}{1.0} \times 10^{-6} = 75 \text{ kNm}$$

Verify resistance to combined bending and torsion

$$\left(\frac{M_{\text{Ed}}}{M_{\text{c,Rd}}}\right)^{\alpha} + \left(\frac{M_{\text{f,Ed}}}{M_{\text{f,Rd}}}\right)^{\beta} \leq 1.0$$

Based on Eq (6.41)

$$\left(\frac{M_{\text{Ed}}}{M_{\text{c,Rd}}}\right)^{\alpha} + \left(\frac{M_{\text{f,Ed}}}{M_{\text{f,Rd}}}\right)^{\beta} = \left(\frac{92}{323}\right)^{1} + \left(\frac{27.8}{75}\right)^{1} = 0.66 < 1.0$$

Therefore the resistance of the cross-sectional to combined bending and torsion is adequate.

6.12.2 Buckling resistance

Verify that:

$$k_{yy}\frac{M_{y,Ed}+\Delta M_{y,Ed}}{\chi_{LT}\dfrac{M_{y,Rk}}{\gamma_{M1}}}+k_{yz}\frac{M_{z,Ed}+\Delta M_{z,Ed}}{\dfrac{M_{z,Rk}}{\gamma_{M1}}}\leq 1.0 \qquad \text{(no compression force)}$$

Based on Eq (6.61)

And

$$k_{zy}\frac{M_{y,d}+\Delta M_{y,Ed}}{\chi_{LT}\dfrac{M_{y,Rk}}{\gamma_{M1}}}+k_{zz}\frac{M_{z,Ed}+\Delta M_{z,Ed}}{\dfrac{M_{z,Rk}}{\gamma_{M1}}}\leq 1.0 \text{ (no compression force)}$$

Based on Eq (6.62)

For Class 1, 2 and 3 cross sections — Table 6.7

$\Delta M_{y,Ed}$ and $\Delta M_{z,Ed}$ are zero.

$M_{y,Rk} = f_y W_{pl,y}$

$M_{z,Rk} = f_y W_{pl,z}$

As $\gamma_{M1} = 1.0$, Expressions (6.61) and (6.62) simplify to the following:

$$k_{yy}\frac{M_{y,Ed}}{M_{b,y,Rd}}+k_{yz}\frac{M_{z,Ed}}{M_{c,z,Rd}}\leq 1.0$$

And

$$k_{zy}\frac{M_{y,Ed}}{M_{b,y,Rd}}+k_{zz}\frac{M_{z,Ed}}{M_{c,z,Rd}}\leq 1.0$$

Interaction factors (k_{yi} & k_{zi})

The interaction factors are determined from either Annex A (Method 1) or Annex B (Method 2) of BS EN 1993-1-1. For doubly symmetric sections, the UK National Annex allows the use of either method. — NA.2.21

Here the method given in Annex B is used.

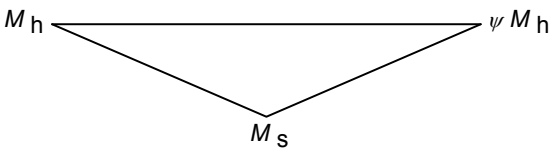

Figure 6.5

From the bending moment diagram for both the *y-y* and *z-z* axes $\psi = 1.0$ and — Table B.3

$$\alpha_h = \frac{M_h}{M_s} = \frac{0}{92} = 0$$

Therefore, as the loading is predominantly due to the concentrated load,

$C_{my} = C_{mz} = C_{mLT} = 0.9 + 0.1\alpha_h = 0.9 + (0.1 \times 0) = 0.9$

As $N_{Ed} = 0$ kN, the expressions given in Tables B.1 and B.2 simplify to: — Table B.1

$k_{yy} = C_{my} = 0.9$

$k_{zz} = C_{mz} = 0.9$

$k_{yz} = 0.6 k_{zz} = 0.6 \times 0.9 = 0.54$

As there is no compression force (N_{Ed} = 0 kN), $k_{zy} = 1.0$ — Table B.2

$M_{b,y,Rd} = M_{b,Rd} = 323.0$ kNm — Sheet 9

$M_{c,z,Rd} = M_{f,Rd} = 75.0$ kNm — Sheet 10

$M_{y,Ed} = 92.0$ kNm — Sheet 3

$M_{z,Ed} = M_{f,Ed} = 27.8$ kNm — Sheet 10

Hence:

$$k_{yy} \frac{M_{y,Ed}}{M_{b,Rd,y}} + k_{yz} \frac{M_{z,Ed}}{M_{c,Rd,z}} = 0.9 \times \left(\frac{92.0}{323}\right) + 0.54 \times \left(\frac{27.8}{75}\right) = 0.46 < 1.0$$

$$k_{zy} \frac{M_{y,Ed}}{M_{b,Rd,y}} + k_{zz} \frac{M_{z,Ed}}{M_{c,Rd,z}} = 1.0 \times \left(\frac{92.0}{323}\right) + 0.9 \times \left(\frac{27.8}{75}\right) = 0.62 < 1.0$$

Therefore the buckling resistance of the member is adequate.

7 Continuous beam designed elastically

References are to BS EN 1993-1-1: 2005, including its National Annex, unless otherwise stated.

7.1 Scope

The continuous non-composite beam shown in Figure 7.1 has its top flange fully restrained laterally by a composite slab supported on secondary beams. The bottom flange is restrained at the supports and the top flange is supported at the points of load application by the secondary beams. The permanent action is 50 kN/m and the variable action is 75 kN/m from point 1 to point 6 and 100 kN/m from point 6 to point 8. Design the beam elastically in S275 steel using a uniform section throughout.

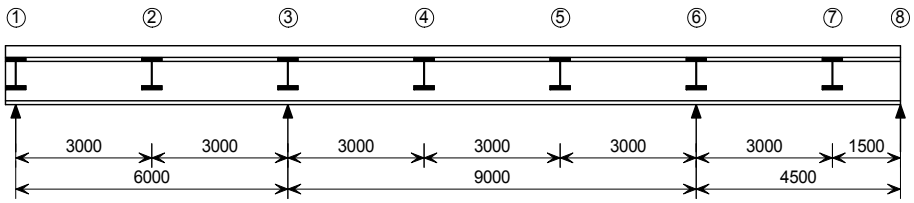

Figure 7.1

The design aspects covered in this example are:

- Cross section classification
- Cross sectional resistance:
  - Shear buckling
  - Shear
  - Bending moment
- Buckling resistance
  - Lateral torsional buckling resistance

The resistance of the web to transverse forces is not considered in this example.

Calculations for the verification of the vertical deflection of the beam under serviceability limit state loading are not given.

7.2 Actions (loading)

For simplicity, all actions (including the beam self weight) are considered as concentrated loads acting at the eight numbered locations. Only the forces at 2, 4, 5 and 7 give rise to bending moments and shear forces.

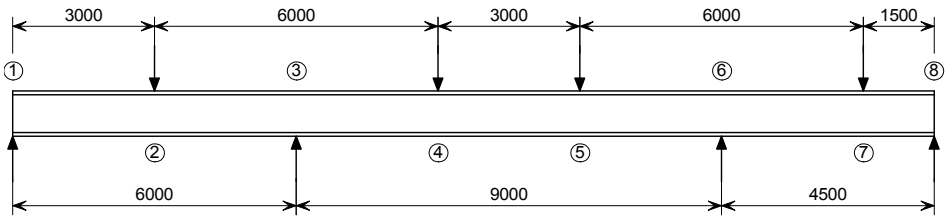

Figure 7.2

Only the combined actions given by Expression 6.10b are considered here, see Section 2.2.4 of Example 2.

EN 1990 allows permanent actions to be considered as favourable or unfavourable.

Note 2 to Table NA.A1.2(B) of the UK National Annex BS EN 1990 states that "The characteristic values of all permanent actions from one source are multiplied by $\gamma_{G,sup}$ if the total resulting action effect is unfavourable and $\gamma_{G,inf}$ if the total resulting action effect is favourable."

The permanent actions considered here are due to the self weight of the structure, therefore they should be considered as actions from one source.

$\gamma_{G,sup} = 1.25$ and $\gamma_{G,inf} = 1.0$

$\gamma_Q = 1.5$

BS EN 1990 Table NA.A1.2(B)

For combination 6.10b the design values are given by:

$F_{G,sup,d} = \varepsilon\gamma_{G,sup}G = 0.925 \times 1.35G = 1.25G$ (Unfavourable)

$F_{G,inf,d} = \gamma_{G,inf}G = 1.0G$ (Favourable)

$F_{Q,d} = \gamma_Q Q = 1.5Q$

The values at each location are tabulated below.

	Characteristic values of actions (kN)		Design values of actions (kN) Unfavourable		Design values of actions (kN) Favourable	
Location	G	Q	$\varepsilon\gamma_{G,sup}G$	$\gamma_Q Q$	$\gamma_{G,inf}G$	$\gamma_Q Q$
2	150.0	225.0	187.5	337.5	150.0	337.5
4	150.0	225.0	187.5	337.5	150.0	337.5
5	150.0	225.0	187.5	337.5	150.0	337.5
7	112.5	225.0	140.6	337.5	112.5	337.5

7.3 Design bending moments and shear forces

For continuous beams with slabs in buildings without cantilevers on which uniformly distributed loads are dominant, it is sufficient to consider only the arrangements of actions shown in Figure 7.3. AB.2(1)B

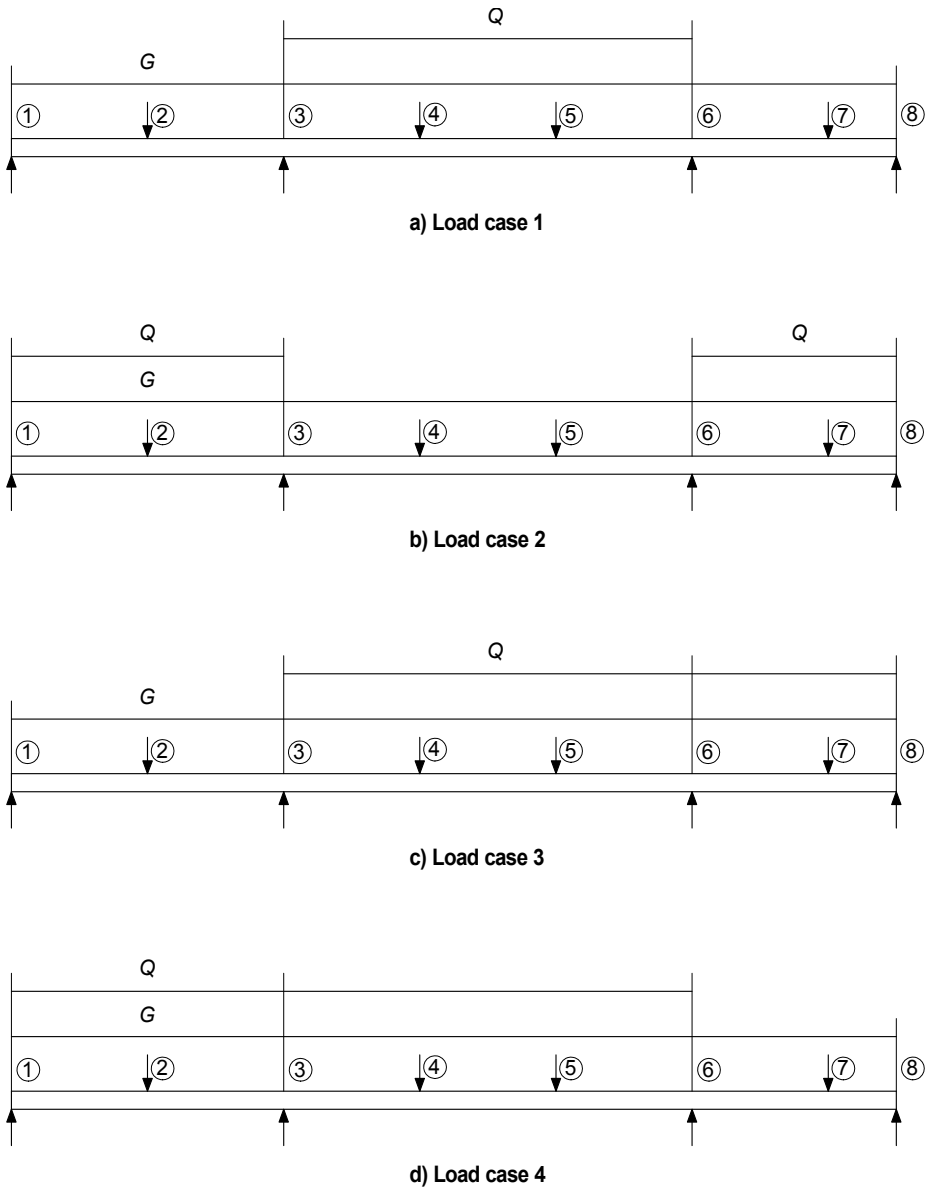

Figure 7.3

The design bending moment and shear force diagrams are shown in Figure 7.4. From inspection, it can be seen that the most onerous design values are obtained using the unfavourable permanent action (Figure 7.4d).

Maximum design bending moment occurs at point 3 for load case 4

M_{Ed} = –952 kNm

Maximum design shear force occurs at point 3 for load case 4

V_{Ed} = 546 kN

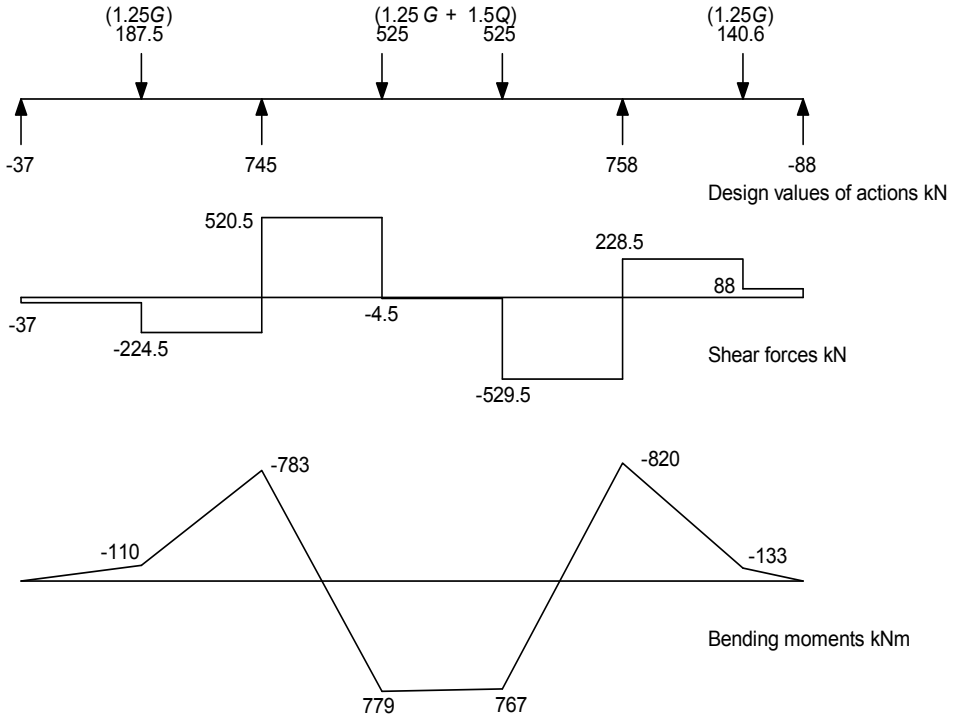

Figure 7.4a) Load case 1

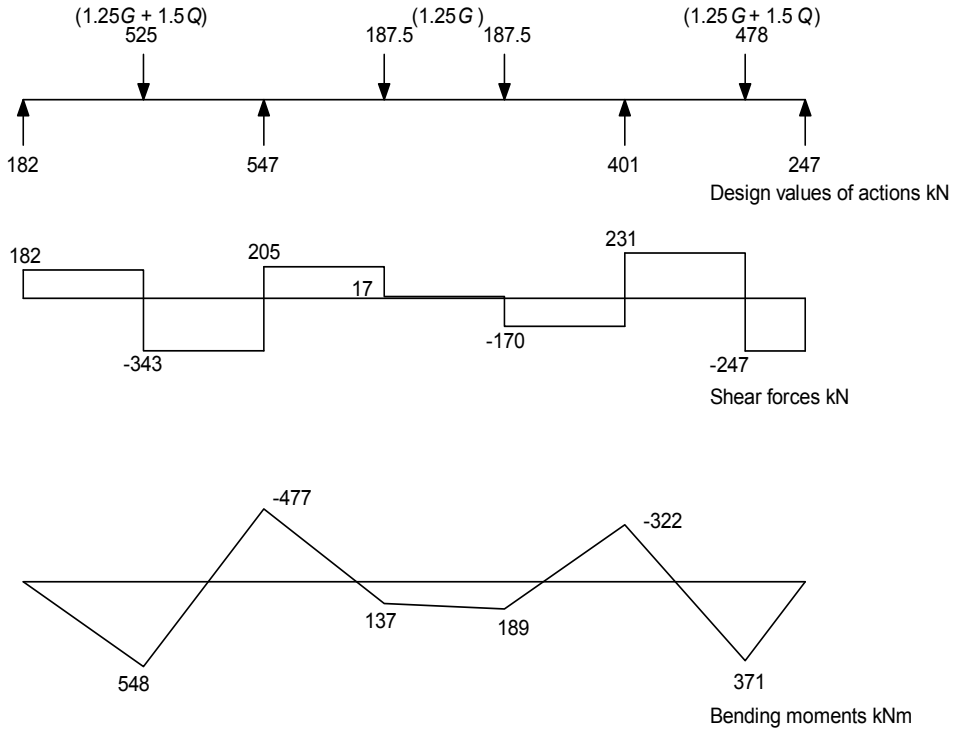

Figure 7.4b) Load case 2

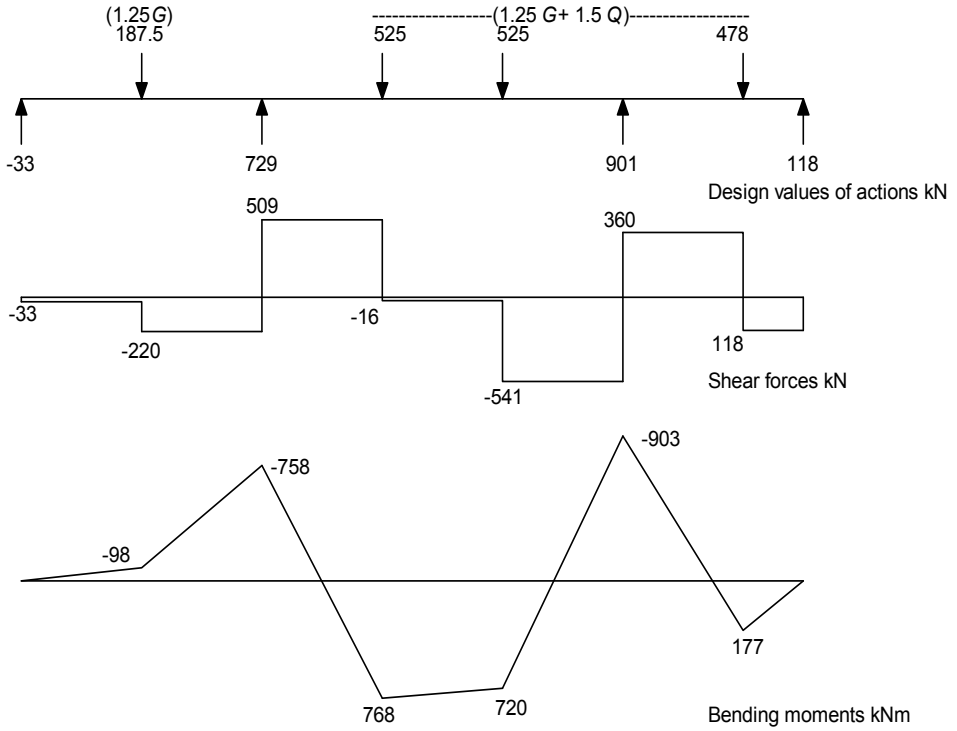

Figure 7.4c) Load case 3

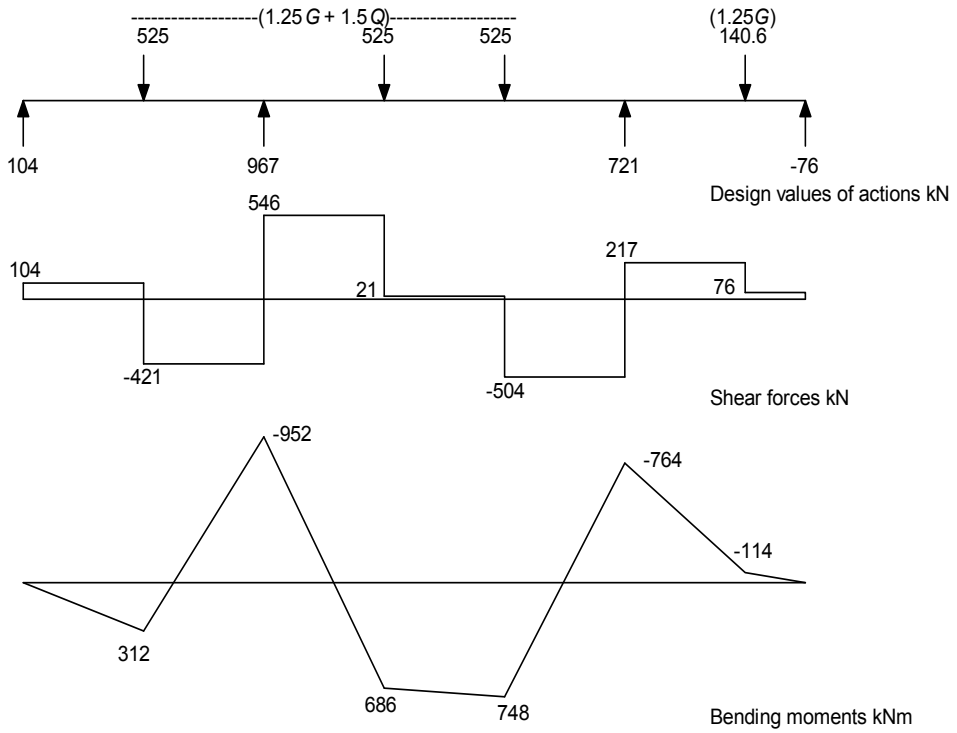

Figure 7.4d) Load case 4

7.4 Section properties

Try 686 × 254 × 125 UKB in S275

Depth	h	= 677.9 mm	P363
Width	b	= 253.0 mm	
Web thickness	t_w	= 11.7 mm	
Flange thickness	t_f	= 16.2 mm	
Root radius	r	= 15.2 mm	
Depth between fillets	d	= 615.1 mm	
Second moment of area y axis	I_y	= 118 000 cm^4	
Second moment of area z axis	I_z	= 4 380 cm^4	
Radius of gyration y axis	i_y	= 27.20 cm	
Radius of gyration z axis	i_z	= 5.24 cm	
Plastic modulus y axis	$W_{pl,y}$	= 3 990 cm^3	
Plastic modulus z axis	$W_{pl,z}$	= 542 cm^3	
Elastic modulus y axis	$W_{el,y}$	= 3 480 cm^3	
Elastic modulus z axis	$W_{el,z}$	= 346 cm^3	
Area	A	= 159 cm^2	
Modulus of elasticity	E	= 210 000 N/mm^2	3.2.6(1)

For buildings that will be built in the UK, the nominal values of the yield strength (f_y) and the ultimate strength (f_u) for structural steel should be those obtained from the product standard. Where a range is given, the lowest nominal value should be used. — NA.2.4

For S275 steel and $16 < t \leq 60$ mm — BS EN 10025-2 Table 7

Yield strength $f_y = R_{eH} = 265$ N/mm^2

7.5 Cross section classification

$$\varepsilon = \sqrt{\frac{235}{f_y}} = \sqrt{\frac{235}{265}} = 0.94$$ — Table 5.2

Outstand of compression flange — Table 5.2

$$c = \frac{b - t_w - 2r}{2} = \frac{253 - 16.2 - (2 \times 15.2)}{2} = 103.2$$

$$\frac{c}{t_f} = \frac{103.2}{16.2} = 6.37$$

The limiting value for Class 1 is $\frac{c}{t_f} \leq 9\varepsilon = 9 \times 0.94 = 8.46$

$6.37 < 8.46$

Therefore, the flange in compression is Class 1

Web subject to bending

$c = d = 615.1$ mm

$$\frac{c}{t_w} = \frac{615.1}{11.7} = 52.57$$

The limiting value for Class 1 is $\frac{c}{t_f} \leq 72\varepsilon = 72 \times 0.94 = 67.68$

$52.57 < 67.68$

Therefore, the web is Class 1 under bending.

Therefore the cross section is Class 1 under bending.

7.6 Partial factors for resistance

$\gamma_{M0} = 1.0$ NA.2.15

$\gamma_{M1} = 1.0$

7.7 Cross-sectional resistance

7.7.1 Shear buckling

The shear buckling resistance for webs should be verified according to Section 5 of BS EN 1993-1-5 if: 6.2.6(6)

$$\frac{h_w}{t_w} > 72\frac{\varepsilon}{\eta}$$ Eq (6.23)

$\eta = 1.0$ BS EN 1993-1-5 NA.2.4

$h_w = h - 2t_f = 677.9 - (2 \times 16.2) = 645.50$ mm

$$\frac{h_w}{t_w} = \frac{645.50}{11.7} = 55.17$$

$$72\frac{\varepsilon}{\eta} = 72 \times \frac{0.94}{1.0} = 67.68$$

$55.17 < 67.68$

Therefore the shear buckling resistance of the web does not need to be verified.

7.7.2 Shear resistance

Verify that 6.2.6(1) Eq (6.17)

$$\frac{V_{Ed}}{V_{c,Rd}} \leq 1.0$$

For Class 1 and 2 cross sections

$V_{c,Rd} = V_{pl,Rd}$

$$V_{pl,Rd} = \frac{A_v (f_y / \sqrt{3})}{\gamma_{M0}}$$ 6.2.6(2) Eq (6.18)

A_v is the shear area and is determined as follows for rolled I and H sections with the load applied parallel to the web.

$A_v = A - 2bt_f + t_f(t_w + 2r)$ but not less than $\eta h_w t_w$ — 6.2.6(3)

$= 159 \times 10^2 - (2 \times 253 \times 16.2) + 16.2 \times (11.7 + (2 \times 15.2)) = 8384.82\ \text{mm}^2$

$\eta h_w t_w = 1.0 \times 645.5 \times 11.7 = 7552.35\ \text{mm}^2$

8384.82 > 7552.35

Therefore, $A_v = 8384.82\ \text{mm}^2$

The design plastic shear resistance is: — 6.2.6(2) Eq (6.18)

$$V_{pl,Rd} = \frac{A_v (f_y/\sqrt{3})}{\gamma_{M0}} = \frac{8384.82 \times (265/\sqrt{3})}{1.0} \times 10^{-3} = 1283\ \text{kN}$$

Maximum design shear $V_{Ed} = 546$ kN — Sheet 5

$$\frac{V_{Ed}}{V_{c,Rd}} = \frac{546}{1283} = 0.43 < 1.0$$

Therefore the shear resistance of the section is adequate.

7.7.3 Resistance to bending

Verify that: — 6.2.5(1) Eq (6.12)

$$\frac{M_{Ed}}{M_{c,Rd}} \le 1.0$$

At the point of maximum bending moment (mid-span), check if the shear force will reduce the bending moment resistance of the section.

$$\frac{V_{c,Rd}}{2} = \frac{1283}{2} = 641.5\ \text{kN}$$

Shear force at maximum bending moment $V_{Ed} = 546$ kN — Sheet 5

546 kN < 641.5 kN

Therefore **no reduction** in resistance to bending due to shear is required.

The design resistance for bending for Class 1 and 2 cross-sections is: — 6.2.5(2)

$$M_{c,Rd} = M_{pl,Rd} = \frac{W_{pl,y} f_y}{\gamma_{M0}} = \frac{3990 \times 10^3 \times 265}{1.0} \times 10^{-6} = 1057\ \text{kNm}$$ — Eq (6.13)

The design bending moment is: — Sheet 5

$M_{Ed} = 952$ kNm

$$\frac{M_{Ed}}{M_{c,Rd}} = \frac{952}{1057} = 0.90 < 1.0$$ — 6.2.5(1) Eq (6.12)

Therefore the bending moment capacity is adequate.

7.8 Buckling resistance of the member in bending

With the lower flange of the beam unrestrained along its length, lateral torsional buckling verifications should be performed for the sections subject to a hogging bending moment (when the lower flange will be in compression). By inspection of Figure 7.4, it can be seen that the most critical lengths are 6 to 7 for load case 1 and 2 to 3 for load case 4.

Verify section 6 to 7 for load case 1

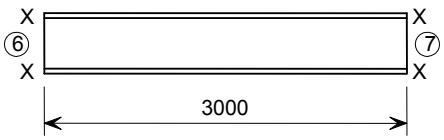

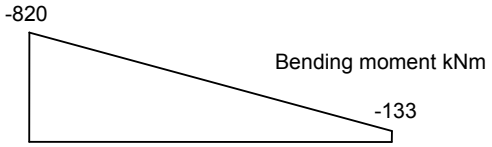

$M_{6,Ed}$ = -820 kNm $M_{7,Ed}$ = -133 kNm

If the lateral torsional buckling slenderness ($\bar{\lambda}_{LT}$) is less than or equal to $\bar{\lambda}_{LT,0}$ the effects of lateral torsional buckling may be neglected, and only cross-sectional resistances apply. 6.3.2.2(4)

The value of $\bar{\lambda}_{LT,0}$ for rolled sections is given by the UK National Annex as $\bar{\lambda}_{LT,0} = 0.4$ NA.2.15

$$\bar{\lambda}_{LT} = \sqrt{\frac{W_y f_y}{M_{cr}}}$$ 6.3.2.2(1)

BS EN 1993-1-1 does not give a method for determining the elastic critical moment for lateral-torsional buckling (M_{cr}). A value for $\bar{\lambda}_{LT}$ can be determined directly without having to calculate M_{cr}. The simplified conservative method given in SCI P362 is used here to determine a value for $\bar{\lambda}_{LT}$.

$$\bar{\lambda}_{LT} = \frac{1}{\sqrt{C_1}} 0.9\bar{\lambda}_z\sqrt{\beta_w}$$ P362 5.6.2.1(5)

$$\psi = \frac{M_{7,Ed}}{M_{6,Ed}} = \frac{-133}{-820} = 0.16$$

Therefore $\frac{1}{\sqrt{C_1}} = 0.79$ P362 Table 5.5

Span length considered

$L_{6\text{-}7}$ = 3000 mm

$\lambda_1 = 93.9\varepsilon = 93.9 \times 0.94 = 88$ 6.3.1.3(1)

$$\bar{\lambda}_z = \left(\frac{L_{6\text{-}7}}{i_z}\right)\left(\frac{1}{\lambda_1}\right) = \left(\frac{3000}{52.4}\right) \times \left(\frac{1}{88}\right) = 0.65$$

β_w = 1.00 for Class 1 and 2 sections

$$\bar{\lambda}_{LT} = \frac{1}{\sqrt{C_1}} 0.9 \bar{\lambda}_z \sqrt{\beta_w} = 0.79 \times 0.9 \times 0.65 \times \sqrt{1} = 0.46$$ P362 5.6.2.1(5)

From the UK National Annex $\bar{\lambda}_{LT,0} = 0.4$ NA.2.17

$0.46 > 0.4$

Therefore the resistance to lateral-torsional buckling should be verified. 6.3.2.2(4)

Verify that:

$$\frac{M_{Ed}}{M_{b,Rd}} \leq 1.0$$ 6.3.2.1(1) Eq (6.54)

The design buckling resistance moment is determined from: 6.3.2.1(3)

$$M_{b.Rd} = \chi_{LT} W_y \frac{f_y}{\gamma_{M1}}$$ Eq (6.55)

$W_y = W_{pl,y}$ for Class 1 and 2 cross-sections

As a UKB is being considered, the method given in 6.3.2.3 for determining the reduction factor for lateral-torsional buckling (χ_{LT}) of rolled sections is used.

$$\chi_{LT} = \frac{1}{\Phi_{LT} + \sqrt{\Phi_{LT}^2 - \beta \bar{\lambda}_{LT}^2}} \text{ but } \leq 1.0 \text{ and } \leq \frac{1}{\bar{\lambda}_{LT}^2}$$ 6.3.2.3(1) Eq (6.57)

where:

$$\Phi_{LT} = 0.5\left(1 + \alpha_{LT}\left(\bar{\lambda}_{LT} - \bar{\lambda}_{LT,0}\right) + \beta \bar{\lambda}_{LT}^2\right)$$

From the UK National Annex $\bar{\lambda}_{LT,0} = 0.4$ and $\beta = 0.75$ NA.2.17

The appropriate buckling curve depends on h/b:

$$\frac{h}{b} = \frac{677.9}{253.0} = 2.68$$

$2 < 2.68 < 3.1$, therefore use buckling curve 'c' NA.2.17

For buckling curve 'c' $\alpha_{LT} = 0.49$ NA.2.16 & Table 6.3

$$\Phi_{LT} = 0.5 \times \left(1 + 0.49 \times \left(0.46 - 0.4\right) + (0.75 \times 0.46^2)\right) = 0.59$$ 6.3.2.2(1)

$$\chi_{LT} = \frac{1}{0.59 + \sqrt{0.59^2 - (0.75 \times 0.46^2)}} = 0.98$$

$$\frac{1}{\bar{\lambda}_{LT}} = \frac{1}{0.46^2} = 4.73$$

$0.98 < 1.00 < 4.73$

Therefore

$\chi_{LT} = 0.98$

To account for the shape of the bending moment distribution, χ_{LT} may be modified by the use of a factor 'f'.

$$\chi_{LT,mod} = \frac{\chi_{LT}}{f} \text{ but } \chi_{LT,mod} \leq 1.0$$ Eq (6.58)

where:

$$f = 1 - 0.5(1 - k_c)\left[1 - 2(\bar{\lambda}_{LT} - 0.8)^2\right] \text{ but } f \leq 1.0$$ 6.3.2.3(2)

$$k_c = \frac{1}{\sqrt{C_1}}$$ NA.2.18

$$\frac{1}{\sqrt{C_1}} = 0.79 \text{ (from sheet 9)}$$

Hence,

$$k_c = 0.79$$

$$f = 1 - 0.5 \times (1 - 0.79) \times \left[1 - 2 \times (0.46 - 0.8)^2\right] = 0.92$$ 6.3.2.3(2)

Therefore,

$$\chi_{LT,mod} = \frac{0.98}{0.92} = 1.07 > 1.0$$ Eq (6.58)

Therefore,

$$\chi_{LT,mod} = 1.0$$

The design buckling resistance moment for this length ($M_{6\text{-}7,b,Rd}$) is Eq (6.54)

$$M_{6\text{-}7,b,Rd} = \chi_{LT,mod} W_{pl,y} \frac{f_y}{\gamma_{M1}} = 1.0 \times 3990 \times 10^3 \times \frac{265}{1.0} \times 10^{-6} = 1057 \text{ kNm}$$

$$\frac{M_{6,Ed}}{M_{6\text{-}7,b,Rd}} = \frac{820}{1057} = 0.78 < 1.0$$

Therefore the design buckling resistance moment between points 6 and 7 for load case 1 is adequate.

Verify length 2 to 3 for load case 4

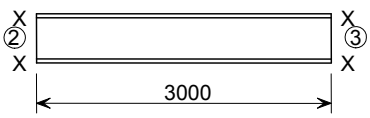

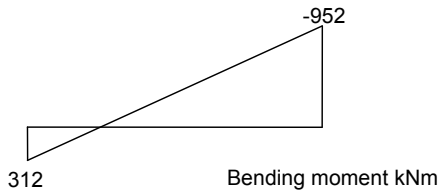

$M_{2,Ed}$ = 312 kNm $M_{3,Ed}$ = -952 kNm

$$\psi = \frac{M_{2,Ed}}{M_{3,Ed}} = \frac{312}{-952} = -0.33$$

Therefore $\frac{1}{\sqrt{C_1}} = 0.69$ — P362 Table 5.5

Span length considered

$L_{2\text{-}3} = 3000$ mm

$\lambda_1 = 88$ — Sheet 9

$$\bar{\lambda}_z = \left(\frac{L_{2\text{-}3}}{i_z}\right)\left(\frac{1}{\lambda_1}\right) = \left(\frac{3000}{52.4}\right)\times\left(\frac{1}{88}\right) = 0.65$$

$\beta_w = 1.00$ for Class 1 and 2 sections

$$\bar{\lambda}_{LT} = \frac{1}{\sqrt{C_1}} 0.9\bar{\lambda}_z\sqrt{\beta_w} = 0.69 \times 0.9 \times 0.65 \times \sqrt{1} = 0.40$$

P362 5.6.2.1(5)

From the UK National Annex $\bar{\lambda}_{LT,0} = 0.4$ — NA.2.17

As $\bar{\lambda}_{LT} = \bar{\lambda}_{LT,0}$ the resistance to lateral-torsional buckling does not need to be verified. — 6.3.2.2(4)

7.9 Blue Book Approach

Page references in Section 7.9 are to P363 unless otherwise stated.

The design resistances may be obtained from SCI publication P363.

Consider the 686 × 254 × 125 UKB in S275

7.9.1 Design bending moments and shear forces

The four possible load cases are shown in Figure 7.3, with the design bending moment and shear force diagrams shown in Figure 7.4.

Maximum design bending moment occurs at point 3 for load case 4

$M_{Ed} = 952$ kNm

Maximum design shear occurs at point 3 for load case 4

$V_{Ed} = 546$ kN

7.9.2 Cross section classification

Under bending the 686 × 254 × 125 UKB in S275 is Class 1. — Page C-63

7.9.3 Cross-sectional resistance

Shear resistance

$V_{c,Rd} = 1280$ kN — Page C-102

$$\frac{V_{Ed}}{V_{c,Rd}} = \frac{546}{1280} = 0.43 < 1.0$$

Therefore the shear resistance is adequate

Bending moment resistance

$$\frac{V_{c,Rd}}{2} = \frac{1280}{2} = 640 \text{ kN}$$

$$V_{3,Ed} = 546 \text{ kN} < 640 \text{ kN}$$

Therefore there is **no reduction** in the bending resistance.

$M_{c,y,Rd}$ = 1060 kNm — Page C-63

$$\frac{M_{Ed}}{M_{c,y,Rd}} = \frac{952}{1060} = 0.90 < 1.0$$

Therefore the bending moment resistance is adequate

7.9.4 Member buckling resistance

Consider length 6-7

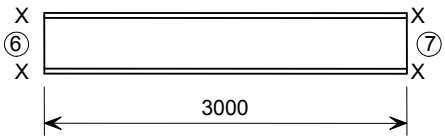

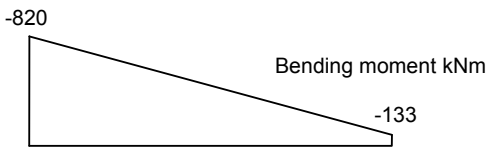

$M_{6,Ed}$ = -820 kNm $\quad M_{7,Ed}$ = -133 kNm

Take the buckling length (L_{cr}) to be the span length between adjacent lateral restraints, therefore:

L_{cr} = 3.0 m

From Sheet 9 $\frac{1}{\sqrt{C_1}} = 0.79$ — Sheet 9

Thus,

$$C_1 = \left(\frac{1}{0.79}\right)^2 = 1.60$$

From interpolation for C_1 = 1.60 and L = 3 m

$M_{b,Rd}$ = 1060 kNm — Page C-63

Therefore,

$M_{6\text{-}7,b,Rd}$ = 1060 kNm

Note: The value determined from the Blue Book for $M_{6\text{-}7,b,Rd}$ is greater than that determined in Section 7.8 of this example because the simplified conservative method given in P362 has been used to determine $\bar{\lambda}_{LT}$.

$$\frac{M_{6,Ed}}{M_{6\text{-}7,b,Rd}} = \frac{820}{1060} = 0.77 < 1.0$$

The buckling resistance is adequate.

Consider length 2-3

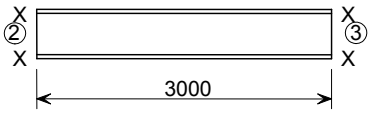

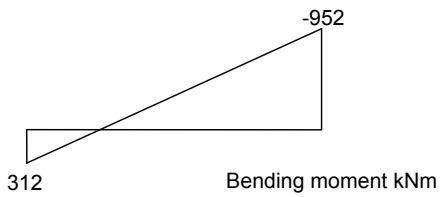

$M_{2,Ed}$ = 312 kNm $M_{3,Ed}$ = -952 kNm

Take the buckling length (L_{cr}) to be the span length between adjacent lateral restraints, therefore:

L_{cr} = 3.0 m

From sheet 12 $\frac{1}{\sqrt{C_1}} = 0.69$ Sheet 12

Thus,

$$C_1 = \left(\frac{1}{0.69}\right)^2 = 2.10$$

From interpolation for C_1 = 2.10 and L = 3 m

$M_{b,Rd}$ = 1060 kNm Page C-63

Therefore,

$M_{2\text{-}3,b,Rd}$ = 1060 kNm

$$\frac{M_{3,Ed}}{M_{2\text{-}3,b,Rd}} = \frac{952}{1060} = 0.90 < 1.0$$

The buckling resistance is adequate.

8 Simply supported composite beam

References are to BS EN 1994-1-1: 2005, including its National Annex, unless otherwise stated.

8.1 Scope

Design the composite beam shown in Figure 8.1 in S275 steel. The beam is subject to a uniform load and is not propped during construction. The beam-to-column connections are such that the beams may be considered as simply supported.

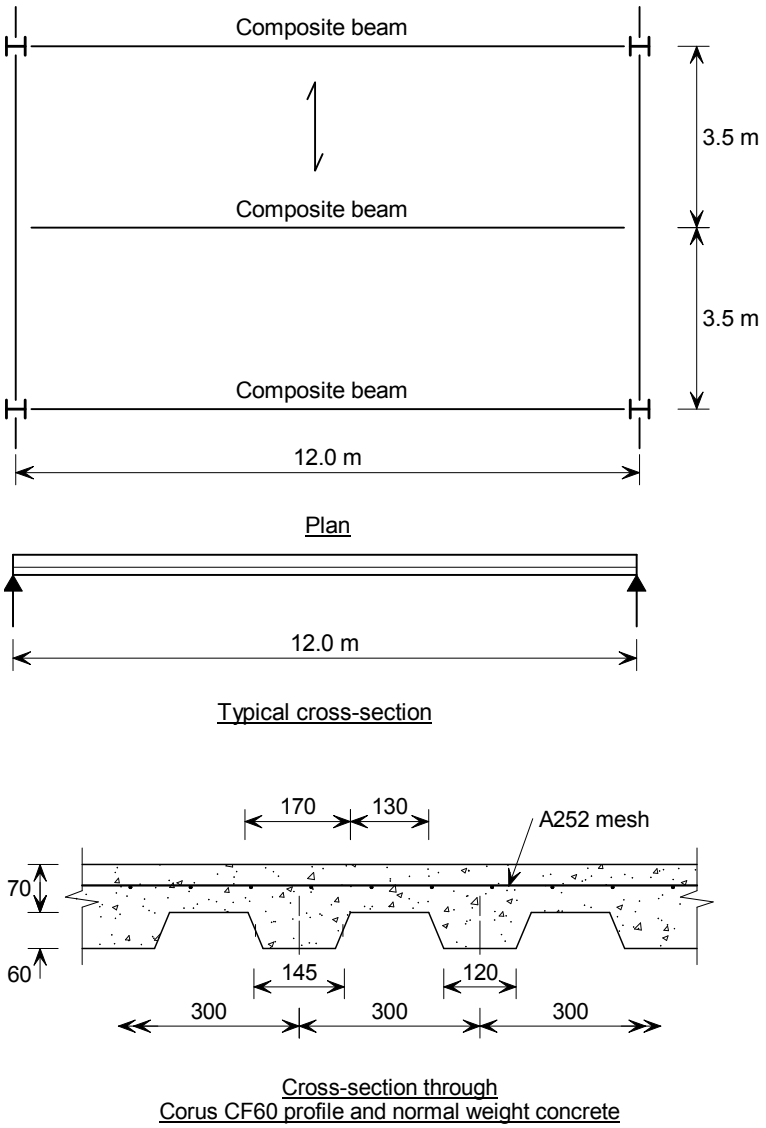

Figure 8.1

The design aspects covered in this example are:

- Calculation of design values actions for ULS and SLS
- Cross section classification
- Cross-sectional resistance of the steel beam
  - Shear buckling
  - Vertical shear
  - Bending moment
- Shear connection
- Cross-sectional resistance of the composite beam
  - Vertical shear
  - Bending moment
  - Longitudinal shear resistance of the slab
- Serviceability considerations
  - Modular ratio
  - Deflections
  - Serviceability stress verification
  - Natural frequency.

8.2 Floor details

Span	L	= 12.0 m
Beam spacing	b	= 3.5 m
Slab depth	h_s	= 130.0 mm
Profiled metal decking	0.9 mm Corus CF60	
Depth of concrete above profile	h_c	= 70.0 mm
Decking profile height	h_p	= 60.0 mm

8.2.1 Shear connectors

Connector diameter	d	= 19 mm
Overall height	h_{sc}	= 100 mm
As-welded height		= 95 mm
Ultimate tensile strength	f_u	= 450 N/mm^2

8.2.2 Concrete

Normal weight concrete grade C25/30

Characteristic cylinder strength	f_{ck}	= 25 N/mm^2	BS EN 1992-1-1 Table 3.1
Characteristic cube strength	$f_{ck.cube}$	= 30 N/mm^2	
Secant modulus of elasticity of concrete	E_{cm}	= 31 kN/mm^2	
Concrete volume (from Corus datasheet)		= 0.097 m³/m²	

8.2.3 Reinforcement

Reinforcing bar diameter		8 mm (A252 mesh)
Spacing of bars		200 mm
Area per unit width (both directions)		252 mm^2/m
Yield strength	f_{sk}	= 500 N/mm^2

8.3 Actions

8.3.1 Construction stage

Permanent actions

Slab (0.097 m³/m² @ 26 kN/m³)		= 2.52 kN/m²	BS EN 1991-1-1 Table A.1
Decking		= 0.10 kN/m²	
Total	$g_{k,1}$	= 2.62 kN/m²	
Allowance for beam self-weight	$g_{k,2}$	= 1.0 kN/m	

Variable actions

BS EN 1991-1-6 NA.2.13 provides recommended values for q_{cc} and q_{ca} but allows alternative values to be determined. — BS EN 1991-1-6 NA.2.13

q_{cc} is the construction load due to non-permanent equipment in position for use during execution.

q_{ca} is the construction load due to working personnel, staff and visitors, possibly with hand tools or other small site equipment.

For composite beam design, the SCI recommends the use of q_{cc} = 0 and q_{ca} = 0.75 kN/m²

Construction loads $q_{k,1} = q_{ca,k}$ = 0.75 kN/m²

8.3.2 Composite stage

Permanent actions

Slab (0.097 m³/m² @ 25 kN/m³)		= 2.43 kN/m²	BS EN 1991-1-1 Table A.1
Decking		= 0.10 kN/m²	
Total	$g_{k,1}$	= 2.53 kN/m²	
Allowance for beam self-weight	$g_{k,2}$	= 1.0 kN/m	
Ceiling and services	$g_{k,3}$	= 0.50 kN/m²	

Variable actions

The beam considered here will support a "general use" office floor area (category B1). — BS EN 1991-1-1 Table NA.2 & Table NA.3

Imposed floor load (B1) $q_{k,1}$ = 2.5 kN/m²

As the composite floor allows a lateral distribution of loads, a uniformly distributed load can be added to the imposed variable floor load to allow for movable partitions. Three values for the imposed load due to moveable partitions are given, here, $q_{k,2}$ = 0.8 kN/m² — BS EN 1991-1-1 6.3.1.2(8)

Therefore, the total variable action is q_k = 3.3 kN/m²

8.3.3 Partial factors for actions

Partial factor for permanent actions	γ_G	= 1.35	BS EN 1990 Table NA.A1.2(B)
Partial factor for variable actions	γ_Q	= 1.50	
Reduction factor	ξ	= 0.925	

Note for this example, the combination coefficient (ψ_0) is not required as the variable actions are not independent of each other (see Section 2.2.4 of Example 2 for discussion).

8.4 Design values of combined actions

8.4.1 Construction stage, at ULS

See the discussion given in Example 2 for details of the options available for the combination of actions for structural resistance. Here Expression 6.10b is used.

$$\xi\gamma_{Gj,sup}\, g_{j,sup} + \gamma_{Gj,inf}\, g_{j,inf} + \gamma_{Q,1}\, q_1 + \gamma_{Q,i}\, \psi_{0,i}\, q_i$$

BS EN 1990 Eq (6.10b)

As there is only a single variable action, $\gamma_{Q,i}$, $\psi_{0,i}$ and q_i are not required in this example.

Therefore, the design UDL on the beam at the construction stage is:

$$F_d = \xi\gamma_G\, g_{k,2} + \left[\xi\gamma_G\, g_{k,1} + \gamma_Q\, q_{k,1}\right] \times b$$

$$F_d = 0.925 \times 1.35 \times 1.0 + \left[(0.925 \times 1.35 \times 2.62) + (1.5 \times 0.75)\right] \times 3.5$$
$$= 16.64 \text{ kN/m}$$

BS EN 1990 Table NA.A1.2(B)

8.4.2 Composite stage, at ULS

The design UDL at the composite stage is:

$$F_d = \xi\gamma_G g_{k,2} + \left[\xi\gamma_G (g_{k,1} + g_{k,3}) + \gamma_Q q_k\right] \times b$$

$$F_d = 0.925 \times 1.35 \times 1.0 + \left[0.925 \times 1.35 \times (2.53 + 0.5) + (1.5 \times 3.3)\right] \times 3.5 = 31.82 \text{ kN/m}$$

BS EN 1990 Table NA.A1.2(B)

8.4.3 SLS Loading

As brittle finishes may be attached to the beam, the characteristic combination of actions is considered. Therefore the applied loading for calculation of deflections is:

Permanent actions applied to steel beam: slab loading + beam weight

$g_1 = 2.53 \times 3.5 + 1.0 = 9.86$ kN/m

Permanent actions applied to composite beam: ceiling and services

$g_2 = 0.5 \times 3.5 = 1.75$ kN/m

Variable actions applied to composite beam: imposed floor load

$q_1 = 3.3 \times 3.5 = 11.6$ kN/m

Variable actions for natural frequency calculations. From guidance given in P354 10% of the imposed load should be considered therefore:

P354

$q_2 = 3.3 \times 3.5 \times 0.1 = 1.16$ kN/m

8.5 Design bending moments and shear forces

8.5.1 Construction stage

Maximum design bending moment is:

$$M_{Ed} = \frac{F_d L^2}{8} = \frac{16.64 \times 12^2}{8} = 299.5 \text{ kNm}$$

Maximum design shear force is:

$$V_{Ed} = \frac{F_d L}{2} = \frac{16.64 \times 12}{2} = 99.8 \text{ kN}$$

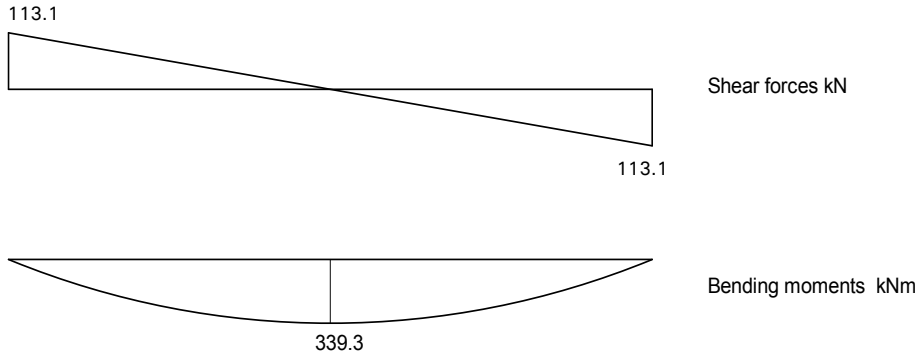

Figure 8.2

8.5.2 Composite stage

Maximum design bending moment is:

$$M_{Ed,comp} = \frac{F_d L^2}{8} = \frac{31.82 \times 12^2}{8} = 572.8 \text{ kNm}$$

Maximum design shear force is:

$$V_{Ed,comp} = \frac{F_d L}{2} = \frac{31.82 \times 12}{2} = 190.9 \text{ kN}$$

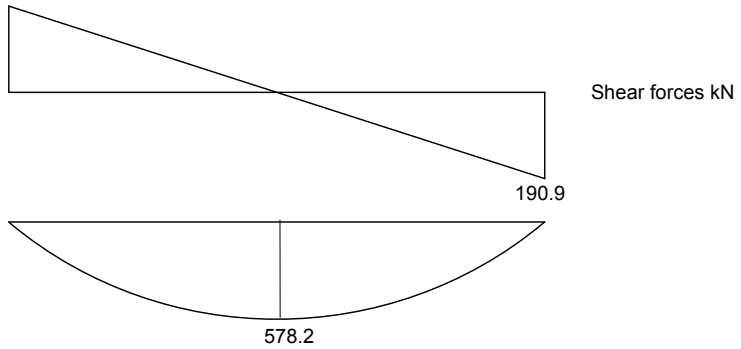

Figure 8.3

8.6 Section properties

533 × 165 × 75 UKB in S275 steel

From section property tables:

Depth	h_a	= 529.1 mm	P363
Width	b	= 165.9 mm	
Web thickness	t_w	= 9.7 mm	
Flange thickness	t_f	= 13.6 mm	
Root radius	r	= 12.7 mm	
Depth between fillets	d	= 476.5 mm	
Second moment of area y axis	I_y	= 41100 cm^4	
Plastic modulus y axis	$W_{pl.y}$	= 1810 cm^3	
Area	A_a	= 95.2 cm^2	

Modulus of elasticity $E = 210$ kN/mm^2 — BS EN 1993-1-1 3.2.6(1)

For buildings that will be built in the UK, the nominal values of the yield strength (f_y) and the ultimate strength (f_u) for structural steel should be those obtained from the product standard. Where a range is given, the lowest nominal value should be used. — BS EN 1993-1-1 NA.2.4

For S275 steel and t ≤ 16 mm — BS EN 10025-2 Table 7

Therefore, $f_y = R_{eH} = 275$ N/mm^2

8.7 Cross section classification

$$\varepsilon = \sqrt{\frac{235}{f_y}} = \sqrt{\frac{235}{275}} = 0.92$$ — BS EN 1993-1-1 Table 5.2

Outstand of compression flange — BS EN 1993-1-1 Table 5.2

$$c = \frac{b - t_w - 2r}{2} = \frac{165.9 - 9.7 - (2 \times 12.7)}{2} = 65.4 \text{ mm}$$

$$\frac{c}{t_f} = \frac{65.4}{13.6} = 4.81$$

The limiting value for Class 1 is $\frac{c}{t_f} \leq 9\varepsilon = 9 \times 0.92 = 8.28$

$4.81 < 8.28$

Therefore the flange in compression is Class 1

Web subject to bending — BS EN 1993-1-1 Table 5.2

$$c = d = 476.5 \text{ mm}$$

$$\frac{c}{t_w} = \frac{476.5}{9.7} = 49.12$$

The limiting value for Class 1 is $\frac{c}{t_w} \leq 72\varepsilon = 72 \times 0.92 = 66.24$

$49.12 < 66.24$

Therefore the web in bending is Class 1.

Therefore the section in bending is Class 1

8.8 Partial factors for resistance

Steel section

$\gamma_{M0} = 1.0$ — BS EN 1993-1-1 NA.2.15

$\gamma_{M1} = 1.0$

Shear connector

For the shear resistance of a shear connector — NA.2.3

$\gamma_v = 1.25$

Concrete

For persistent and transient design situations

$\gamma_c = 1.5$

BS EN 1992-1-1 Table NA.1

Reinforcement

For persistent and transient design situations

$\gamma_s = 1.15$

BS EN 1992-1-1 Table NA.1

8.9 Design resistance for the construction stage

8.9.1 Cross-sectional resistance of the steel beam

Shear buckling

The shear buckling resistance for webs should be verified if:

$$\frac{h_w}{t_w} > \frac{72\varepsilon}{\eta}$$

BS EN 1993-1-5 5.1(2)

$\eta = 1.0$

BS EN 1993-1-5 NA.2.4

$$h_w = h_a - 2t_f = 529.1 - (2 \times 13.6) = 501.9 \text{ mm}$$

$$\frac{h_w}{t_w} = \frac{501.9}{9.7} = 51.74$$

$$72\frac{\varepsilon}{\eta} = 72 \times \frac{0.92}{1.0} = 66.24$$

$51.74 < 66.24$

Therefore the shear buckling resistance of the web does not need to be verified.

Vertical shear resistance

Verify that:

$$\frac{V_{Ed}}{V_{c,Rd}} \leq 1.0$$

BS EN 1993-1-1 6.2.6(1) Eq (6.17)

$V_{c,Rd}$ is the design plastic shear resistance ($V_{pl,Rd}$).

$$V_{c,Rd} = V_{pl,a,Rd} = \frac{A_v\,(f_y/\sqrt{3})}{\gamma_{M0}}$$

BS EN 1993-1-1 6.2.6(2) Eq (6.18)

A_v is the shear area and is determined as follows for rolled I and H sections with the load applied parallel to the web.

$$A_v = A - 2bt_f + t_f(t_w + 2r) \geq \eta h_w t_w$$

$$= 95.2 \times 10^2 - (2 \times 165.9 \times 13.6) + 13.6 \times (9.7 + (2 \times 12.7)) = 5485 \text{ mm}^2$$

BS EN 1993-1-1 6.2.6(3)

$\eta h_w t_w = 1.0 \times (529.1 - 2 \times 13.6) \times 9.7 = 4868 \text{ mm}^2 < 5485 \text{ mm}^2$

Therefore, $A_v = 5485 \text{ mm}^2$

Design plastic shear resistance

BS EN 1993-1-1 6.2.6 (2)

$$V_{\text{pl,a,Rd}} = \frac{A_{\text{v,z}}\ (f_{\text{y}}\ /\sqrt{3})}{\gamma_{\text{M0}}} = \frac{5485 \times (275\ /\sqrt{3}) \times 10^{-3}}{1.0} = 870.9 \text{ kN}$$

Maximum design shear for the construction stage is V_{Ed} = 99.8 kN

$$\frac{V_{\text{Ed}}}{V_{\text{pl,a,Rd}}} = \frac{99.8}{870.9} = 0.115 < 1.0$$

Therefore the shear resistance of the section is adequate.

Bending moment resistance

Verify that:

BS EN 1993-1-1 6.2.5(1) Eq (6.12)

$$\frac{M_{\text{Ed}}}{M_{\text{c,Rd}}} \leq 1.0$$

6.2.2.4(1)

As $\frac{V_{\text{pl,a,Rd}}}{2} = \frac{870.9}{2} = 435.5$ kN > V_{Ed} (99.8 kN)

No reduction in the bending moment resistance of the steel section for coexistent shear need be made at any point along the beam.

BS EN 1993-1-1 6.2.5(2)

The design resistance for bending for Class 1 and 2 cross-sections is:

Eq (6.13)

$$M_{\text{c,Rd}} = M_{\text{pl,a,Rd}} = \frac{W_{\text{pl,y}} f_{\text{y}}}{\gamma_{\text{M0}}} = \frac{1810 \times 10^{3} \times 275}{1.0} \times 10^{-6} = 497.2 \text{ kNm}$$

BS EN 1993-1-1 6.2.5(1) Eq (6.12

$$\frac{M_{\text{y,Ed}}}{M_{\text{c,Rd}}} = \frac{299.5}{497.2} = 0.602 < 1.0$$

Therefore the bending resistance is adequate.

8.9.2 Buckling resistance

The steel decking is connected to the steel beam by thru-deck welding of the stud connectors and provides continuous restraint to the top flange of the steel beam, so the beam is not susceptible to lateral torsional buckling.

8.10 Shear connection

8.10.1 Design resistance of shear connectors

Shear connector in a solid slab

The design resistance of a single headed shear connector in a solid concrete slab (P_{Rd}), which is automatically welded in accordance with BS EN 14555 is given by the smaller of:

6.6.3.1(1) Eq (6.18)

$$P_{\text{Rd}} = \frac{0.8 \times f_{\text{u}} \times \pi \times d^{2}/4}{\gamma_{\text{V}}}$$

and

$$P_{Rd} = \frac{0.29 \times \alpha \times d^2 \sqrt{f_{ck} \times E_{cm}}}{\gamma_V}$$ Eq (6.19)

where:

$$\alpha = 1.0 \text{ as } \frac{h_{sc}}{d} = \frac{100}{19} > 4$$ Eq (6.21)

$$P_{Rd} = \frac{0.8 \times 450 \times \pi \times (19^2/4)}{1.25} \times 10^{-3} = 81.7 \text{ kN}$$ Eq (6.18)

$$P_{Rd} = \frac{0.29 \times 1.0 \times 19^2 \times \sqrt{25 \times 31 \times 10^3}}{1.25} \times 10^{-3} = 73.7 \text{ kN}$$ Eq (6.19)

Therefore the design resistance of a single headed shear connector embedded in a solid concrete slab is

$P_{Rd,solid} = 73.7$ kN

Shear connectors in profiled decking

For profiled decking with ribs running transverse to the supporting beams $P_{Rd,solid}$ should be multiplied by the following reduction factor.

$$k_t = \frac{0.7}{\sqrt{n_r}} \frac{b_0}{h_p} \left(\frac{h_{sc}}{h_p} - 1 \right)$$ 6.6.4.2(1) Eq (6.23)

Where h_p, h_{sc} and b_0 are as shown in Figure 8.4 and n_r is the number of studs in each rib.

But $k_t \leq k_{t,max}$ (taken from Table 6.2) 6.6.4.2(2)

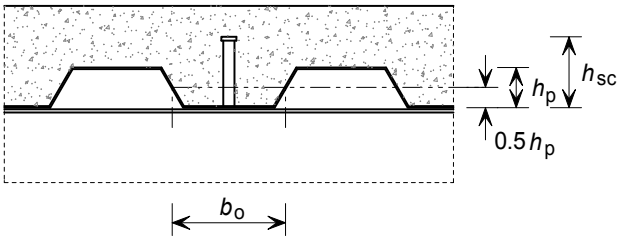

Figure 8.4

$b_0 = 139$ mm
$h_{sc} = 100$ mm
$h_p = 60$ mm

For one shear connector per rib ($n_r = 1$)

$$k_t = \frac{0.7}{\sqrt{1.0}} \times \frac{139}{60} \times \left(\frac{100}{60} - 1 \right) = 1.08$$ Eq (6.23)

For shear connectors welded through the profiled decking with $t \leq 1.0$ mm and $n_r = 1$:

$k_{t,max} = 0.85$ — Table 6.2

Therefore,

$k_t = 0.85$

Hence, the design resistance per shear connector is:

$P_{Rd} = k_t P_{Rd,solid} = 73.7 \times 0.85 = 62.6$ kN

And the design resistance per rib is:

$n_r P_{Rd} = 1 \times 62.6 = 62.6$ kN

For two shear connectors per rib ($n_r = 2$)

$$k_t = \frac{0.7}{\sqrt{2.0}} \times \frac{139}{60} \times \left(\frac{100}{60} - 1\right) = 0.76$$ — Eq (6.23)

For shear connectors welded through the profiled decking with $t \leq 1.0$ mm and $n_r = 2$:

$k_{t,max} = 0.7$ — Table 6.2

Therefore,

$k_t = 0.7$

Hence, the design resistance per shear connector is:

$P_{Rd} = k_t P_{Rd,solid} = 73.7 \times 0.7 = 51.6$ kN

And the design resistance per rib is:

$n_r P_{Rd} = 2 \times 51.6 = 103.2$ kN

8.10.2 Degree of shear connection

Minimum degree of shear connection

For composite beams in buildings, the headed shear connectors may be considered as ductile when the minimum degree of shear connection given in 6.6.1.2 is achieved.

For headed shear connectors with: — 6.6.1.2(1)

$h_{sc} \geq 4d$ and $16 \text{ mm} \leq d \leq 25$ mm

The degree of shear connection may be determined from:

$$\eta = \frac{N_c}{N_{c,f}}$$

where:

N_c is the reduced value of the compressive force in the concrete flange (i.e. the force transferred by the shear connectors)

$N_{c,f}$ is the compressive force in the concrete flange at full shear connection (i.e. the lesser of the compressive resistance of the concrete and the tensile resistance of the steel beam).

For steel sections with equal flanges and $L_e < 25$ m

$$\eta \geq 1 - \left(\frac{355}{f_y}\right)(0.75 - 0.03L_e)\ ,\ \eta \geq 0.4$$

6.6.1.2(1) Eq (6.12)

where:

L_e is the distance between points of zero bending moment; therefore for this simply supported beam:

$L_e = L = 12.0$ m

$$\eta \geq 1 - \left(\frac{355}{275}\right)\left(0.75 - \left(0.03 \times 12\right)\right) = 0.50$$

As $0.50 > 0.4$ the required degree of shear connection is:

$\eta \geq 0.50$

However, for one shear connector per trough ($n_r = 1$), if the following conditions are satisfied, an alternative rule for the minimum degree of shear connection may be used, as long as the simplified method is used to determine the bending resistance of the composite beam:

- shear connectors of diameter 19 mm and height of not less than 76 mm
- rolled or welded I or H section with equal flanges
- composite slab using profiled steel sheeting that runs perpendicular to the beam and is continuous across it
- $b_0/h_p \geq 2$ and $h_p \leq 60$ mm.

As $b_0/h_p = 139/60 = 2.32$ and $h_p = 60$ mm, this method can be used for the case of one shear connector per trough. In this situation,

$$\eta \geq 1 - \left(\frac{355}{f_y}\right)(1.0 - 0.04L_e)\ ,\ \eta \geq 0.4$$

6.6.1.2(1) Eq (6.16)

$$\eta \geq 1 - \left(\frac{355}{275}\right)(1.0 - 0.04 \times 12) = 0.33$$

As $0.33 < 0.4$ the required degree of shear connection with $n_r = 1$ is:
$\eta \geq 0.4$

Degree of shear connection present

To determine the degree of shear connection present in the beam, first the axial forces in the steel and concrete are required ($N_{pl,a}$ and $N_{c,f}$ respectively), as shown in Figure 8.5.

For full shear connection (i.e. $\eta = 1.0$), the minimum of these axial forces would need to be transferred via the shear connectors over half the span. The degree of shear connection is the ratio of the force that can be transferred to this force.

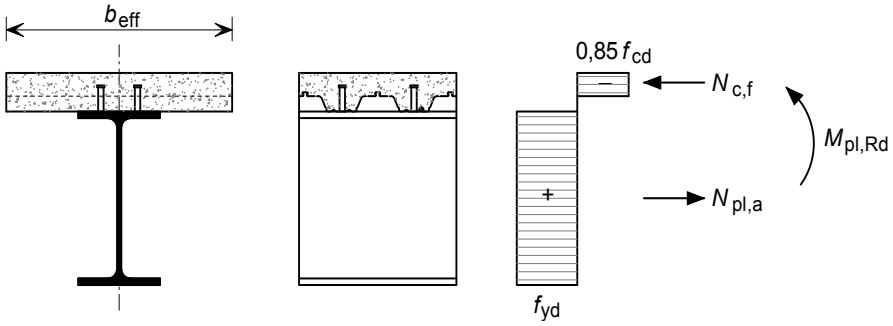

Figure 8.5

Determine the effective width of the concrete flange (b_{eff})

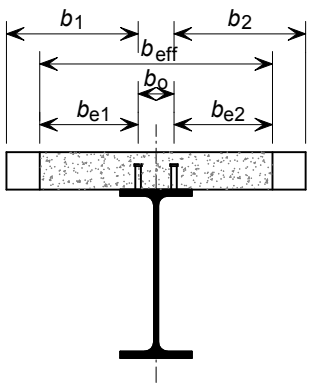

Figure 8.6

At the mid-span the effective width of the concrete flange is determined from: 5.4.1.2(5)

$b_{eff} = b_0 + \sum b_{ei}$

For $n_r = 1$, $b_0 = 0$ mm

For $n_r = 2$, $b_0 = 80$ mm (assumed spacing for pairs of shear connectors)

$b_{ei} = \dfrac{L_e}{8}$, but not greater than b_i

where:

L_e is the distance between points of zero bending moment; therefore for a simply supported beam:

$L_e = L = 12.0$ m

b_i is the distance from the outstand shear connector to a point mid way between adjacent webs, therefore:

For $n_r = 1$, $b_1 = b_2 = 1.75$ m

For $n_r = 2$, $b_1 = b_2 = 1.71$ m

$$b_{e1} = b_{e2} = \frac{L_e}{8} = \frac{12}{8} = 1.5 \text{ m}$$

Therefore,

For $n_r = 1$, $b_{e1} = b_{e2} = 1.50$ m

For $n_r = 2$, $b_{e1} = b_{e2} = 1.50$ m

Hence at the mid-span the effective width of the concrete flange is:

For $n_r = 1$, $b_{eff} = b_0 + b_{e1} + b_{e2} = 0 + (2 \times 1.50) = 3.00$ m

For $n_r = 2$, $b_{eff} = b_0 + b_{e1} + b_{e2} = 0.08 + (2 \times 1.50) = 3.08$ m

Compressive resistance of the concrete flange

The design compressive strength of concrete is

BS EN 1994-1-1 2.4.1.2(2)P

$$f_{cd} = \frac{f_{ck}}{\gamma_c}$$

For persistent and transient design situations the design compressive strength of the concrete is:

$$f_{cd} = \frac{25}{1.5} = 16.7 \text{ N/mm}^2$$

Compressive resistance of the concrete flange is:

For $n_r = 1$,

$N_{c.Rd} = 0.85 f_{cd} b_{eff} h_c = 0.85 \times 16.7 \times 3000 \times 70 \times 10^{-3} = 2981$ kN

For $n_r = 2$,

$N_{c.Rd} = 0.85 f_{cd} b_{eff} h_c = 0.85 \times 16.7 \times 3080 \times 70 \times 10^{-3} = 3060$ kN

Tensile resistance of in the steel member

$N_{pl,a} = f_y A_a = 275 \times 95.2 \times 10^2 \times 10^{-3} = 2618$ kN

Compressive force in the concrete flange

The compressive force in the concrete at full shear connection is the lesser of $N_{c,Rd}$ and $N_{pl,a}$, and so $N_{c,f} = 2618$ kN

Resistance of the shear connectors

n is the number of shear connectors present to the point of maximum bending moment.

In this example there are 20 ribs available for the positioning of shear connectors per half span (i.e. 12 / (2 × 0.3)).

For $n_r = 1$, $n = 20$

For $n_r = 2$, $n = 40$

Where there is less than full shear connection, the reduced value of the compressive force in the concrete flange, N_c, is given by the combined resistance of the shear connectors in each half-span. Thus,

For $n_r = 1$, $N_c = n \times P_{Rd} = 20 \times 62.6 = 1252$ kN

For $n_r = 2$, $N_c = n \times P_{Rd} = 40 \times 51.6 = 2064$ kN

Shear connection present

The degree of shear connection, η, is the ratio of the reduced value of the compressive force, N_c, to the concrete compressive force at full shear connection, $N_{c,f}$.

For $n_r = 1$, $\eta = N_c / N_{c,f} = 1252 / 2618 = 0.48$

For $n_r = 2$, $\eta = N_c / N_{c,f} = 2064 / 2618 = 0.79$

Comparing the shear connection present to the minimum shear connection requirements established above ($\eta > 0.5$, or $\eta > 0.4$ for one stud per trough using the simplified method), the shear connection exceeds the minimum requirement for $n_r = 2$ but only exceeds the requirement for $n_r = 1$ if the simplified method for calculating M_{Rd} is used.

8.11 Design resistances of the cross-section for the composite stage

The top flange is restrained laterally by the slab and therefore only cross-sectional resistances need to be verified

8.11.1 Vertical shear resistance

Shear buckling

As shown in Section 8.9.1, the shear buckling resistance does not need to be verified for the steel section.

Plastic resistance to vertical shear

The resistance to vertical shear ($V_{pl,Rd}$) should be taken as the resistance of the structural steel section ($V_{pl,a,Rd}$). — 6.2.2.2(1)

$V_{pl,a,Rd} = 190.92$ kN — Sheet 8

Maximum design shear for the composite stage is $V_{Ed} = 238.1$ kN — Sheet 5

$$\frac{V_{Ed}}{V_{pl,a,Rd}} = \frac{190.92}{870.9} = 0.2 < 1.0$$

Therefore the vertical shear resistance of the section is adequate.

8.11.2 Resistance to bending

As $\frac{V_{pl,a,Rd}}{2} = \frac{870.9}{2} = 435.5$ kN $> V_{Ed}$ (190.92 kN) — 6.2.2.4(1)

No reduction in the bending resistance of the steel section need be made on account of the shear stress in the beam.

One shear connector per trough ($n_r = 1$)

For one shear connector per trough, the shear connection provided can only satisfy the lower of the minimum shear connection requirements; the simplified method of calculating the design resistance to bending must therefore be used: — 6.2.1.3(5)

$$M_{Rd} = M_{pl,a,Rd} + \left(M_{pl,Rd} - M_{pl,a,Rd}\right)\frac{N_c}{N_{cf}}$$ — Eq (6.1)

where:

$$\frac{N_c}{N_{c,f}} = \eta = 0.48$$

$M_{pl,a,Rd}$ is design value of the plastic resistance moment of the structural steel section (497.2 kNm) — Sheet 8

$M_{pl,Rd}$ is design value of plastic resistance moment of the composite section with full shear connection.

For full shear connection $N_{pl,a}$ (2618 kN) $<$ $N_{c,f}$ (2981 kN) and so the plastic neutral axis of the composite section lies within the concrete.

Therefore, the design plastic resistance moment of the composite section with full shear connection can be determined from:

$$M_{pl.Rd} = N_{pl,a}\left[\frac{h_a}{2} + h_s - \frac{x_c}{2}\right]$$

where:

$$x_c = \left(\frac{N_{pl,a}}{N_{c,f}}\right) \times h_c = \left(\frac{2618}{2981}\right) \times 70 = 61.5 \text{ mm}$$

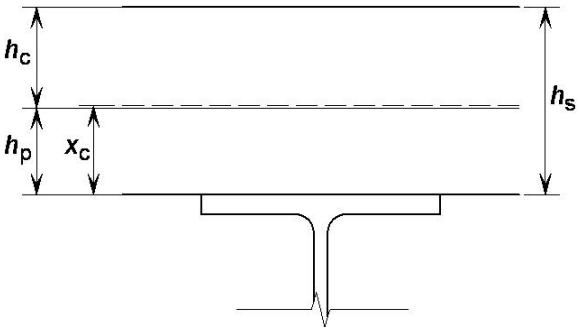

Figure 8.7

$$M_{pl.Rd} = 2618 \times \left[\frac{529.1}{2} + 130 - \frac{61.5}{2}\right] \times 10^{-3} = 952.4 \text{ kNm}$$

Therefore, the design resistance moment of the composite section is:

$$M_{Rd} = M_{pl,a,Rd} + \left(M_{pl,Rd} - M_{pl,a,Rd}\right)\frac{N_c}{N_{cf}}$$

$$M_{Rd} = 497.2 + \left(952.4 - 497.2\right) \times 0.48 = 715.7 \text{ kNm}$$

The design bending moment is:

$$M_{Ed} = 572.8 \text{ kNm}$$ Sheet 5

$$\frac{M_{Ed}}{M_{Rd}} = \frac{572.8}{715.7} = 0.80 < 1.0$$

Therefore the resistance moment of the composite beam is adequate.

Two shear connectors per trough (n_r = 2)

For the case of two shear connectors per trough, the simplified method used for one shear connector per trough may conservatively be used, or rigid plastic theory from 6.2.1.2 may be used, as shown below: 6.2.1.2

With partial shear connection, the axial force in the concrete flange is N_c. As $N_{pl,a}$ (2618 kN) $>$ N_c (2080 kN) the plastic neutral axis of the composite section lies within the steel section.

Assume that the plastic neutral axis lies within the top flange a distance x_{pl} below the top of the top flange of the section, where x_{pl} is given by:

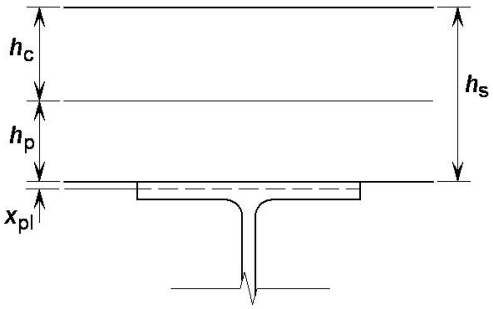

Figure 8.8

$$x_{pl} = \frac{(N_{pl,a} - N_c)}{2 f_y b} = \frac{(2618 - 2080) \times 10^3}{2 \times 275 \times 165.9} = 5.90 \text{ mm} < t_f = 13.6 \text{ mm}$$

So the plastic neutral axis does lie within the top flange. For this situation:

$$M_{Rd} = N_{pl,a} \frac{h_a}{2} + N_c \left(h_s - \eta \frac{h_c}{2} \right) - (N_{pl,a} - N_c) \frac{x_{pl}}{2}$$

$$M_{Rd} = 2618 \times \frac{529.1}{2} + 2080 \times \left(130 - 0.79 \times \frac{70}{2} \right) - (2618 - 2080) \times \frac{5.90}{2}$$

$$M_{Rd} = 692.59 + 212.89 - 1.59 = 903.9 \text{ kNm}$$

The design bending moment is:

$M_{Ed} = 572.8$ kNm — Sheet 5

$$\frac{M_{Ed}}{M_{Rd}} = \frac{572.8}{903.9} = 0.63 < 1.0$$

Therefore the plastic design resistance moment of the composite beam is adequate

8.11.3 Longitudinal Shear Resistance of the Slab

Transverse reinforcement

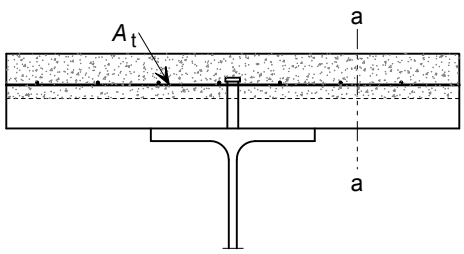

Figure 8.9

As the profiled steel decking has its ribs transverse to the beam, is continuous over the beam and has mechanical interlocking, its contribution to the transverse reinforcement for the shear surface shown in Figure 8.9 may be allowed for by replacing Expression (6.21) in BS EN 1992-1-1, 6.2.4(4) by: — 6.6.6.4(4)

$$\left(\frac{A_{sf} f_{yd}}{s_f} \right) + \left(A_{pe} f_{yp,d} \right) > \frac{v_{Ed} h_f}{\cot \theta}$$ — Eq (6.25)

However, in practice it is usual to neglect the contribution of the steel decking, in which case equation (6.21) may be used:

$$\frac{A_{sf} f_{yd}}{s_f} \geq \frac{v_{Ed} h_f}{\cot\theta_f}$$ (θ and θ_f are synonymous)

BS EN 1992-1-1 Eq (6.21)

where:

v_{Ed} is the design longitudinal shear stress in the concrete slab

f_{yd} is the design yield strength of the reinforcing mesh

$$f_{yd} = \frac{f_y}{\gamma_{M0}} = \frac{500}{1.15} = 434.8 \text{ N/mm}^2$$

h_f is taken as the depth of concrete above the profiled decking

$h_f = h_c = 70$ mm

θ_f given in BS EN 1992-1-1 as the angle of the compression struts. 6.2.4(4)

To prevent crushing of the compression struts in the flange model, Eurocode 2 limits the value of θ_f to:

$1.0 \leq \cot\theta_f \leq 2.0$, $45° \leq \theta_f \leq 26.5°$

BS EN 1992-1-1 6.2.4(4) and Table NA.1

To minimise the amount of reinforcement, try:

$\theta_f = 26.5°$

$\left(\frac{A_{sf}}{s_f}\right) = A_t$ (for the failure plane shown in Figure 8.9)

Figure 6.16

A_t is the cross-sectional area of transverse reinforcement (mm²/m)

Therefore, the verification becomes:

$$A_t f_{yd} > \frac{v_{Ed} h_f}{\cot\theta_f}$$

And the required area of tensile reinforcement (A_t) must satisfy the following:

$$A_t > \frac{v_{Ed} h_f}{f_{yd} \cot\theta_f}$$

The longitudinal shear stresses is given by:

BS EN 1992-1-1 6.2.4(3)

$$v_{Ed} = \frac{\Delta F_d}{h_f \Delta x}$$

where:

Δx is the critical length under consideration, which for this example is the distance between the maximum bending moment and the support.

$$\Delta x = \frac{L}{2} = \frac{12}{2} = 6 \text{ m}$$

$$\Delta F_d = \frac{N_c}{2}$$

For $n_r = 1$, $\Delta F_d = \frac{1252}{2} = 626$ kN; and for $n_r = 2$, $\Delta F_d = \frac{2064}{2} = 1032$ kN

$h_f = 70$ mm

For $n_r = 1$, $v_{Ed} = \dfrac{\Delta F_d}{h_f \Delta x} = \dfrac{626 \times 10^3}{70 \times 6000} = 1.49$ N/mm²

For $n_r = 2$, $v_{Ed} = \dfrac{\Delta F_d}{h_f \Delta x} = \dfrac{1032 \times 10^3}{70 \times 6000} = 2.46$ N/mm²

For $n_r = 1$, $\dfrac{v_{Ed} h_f}{f_{yd} \cot\theta_f} = \dfrac{1.49 \times 70}{434.8 \times \cot(26.5^\circ)} = 0.119$ mm²/mm

For $n_r = 2$, $\dfrac{v_{Ed} h_f}{f_{yd} \cot\theta_f} = \dfrac{2.46 \times 70}{434.8 \times \cot(26.5^\circ)} = 0.196$ mm²/mm

Therefore, the area of tensile reinforcement required is:

For $n_r = 1$, $A_t \geq 119$ mm²/m

For $n_r = 2$, $A_t \geq 196$ mm²/m

The reinforcement provided is A252 mesh, for which:

$A_t = 252$ mm²/m > 197 mm²/m

Therefore an A252 mesh is adequate.

Crushing of the concrete flange

Verify that: — BS EN 1992-1-1 6.2.4(4) Eq (6.22)

$v_{Ed} \leq v f_{cd} \sin\theta_f \cos\theta_f$

where:

$v = 0.6 \times \left[1 - \dfrac{f_{ck}}{250}\right]$ — BS EN 1992-1-1 Table NA.1

$v = 0.6 \times \left[1 - \dfrac{25}{250}\right] = 0.54$

$\theta_f = 26.5°$

f_{cd} is the design compressive strength of concrete according to Eurocode 2 thus,

$f_{cd} = \alpha_{cc} \dfrac{f_{ck}}{\gamma_c}$ — BS EN 1992-1-1 3.1.6(1)P

$\alpha_{cc} = 0.85$ — Table NA.1

$f_{cd} = 0.85 \times \dfrac{25}{1.5} = 14.2$ N/mm²

$v f_{cd} \sin\theta_f \cos\theta_f = 0.54 \times 14.2 \times \sin(26.5°) \times \cos(26.5°) = 3.04$ N/mm²

$v_{Ed} = 2.46$ N/mm² < 3.04 N/mm²

Therefore the crushing resistance of the concrete is adequate.

8.12 Verification at SLS

8.12.1 Modular ratios

For short term loading, the secant modulus of elasticity should be used. From sheet 2, E_{cm} = 31 kN/mm². This corresponds to a modular ratio of

BS EN 1992-1-1 Table 3.1, 3.1.4

5.4.2.2

$$n_0 = \frac{E_a}{E_{cm}} = \frac{210}{31} = 6.77$$

For buildings not intended mainly for storage the effects of creep in concrete beams may be taken in to account by using an effective modular $E_{c,eff} = E_{cm}/2$ and thus,

5.4.2.2(11)

$$n = \frac{E_a}{E_{ceff}} = \frac{210}{15.5} = 13.55$$

For dynamic conditions (i.e. natural frequency calculation), the value of E_c should be determined according to SCI publication P354, *Design of floors for vibration – a new approach* which gives E_c = 38 kN/mm², and so the dynamic modular ratio is:

P354

$$n_d = \frac{E_a}{E_c} = \frac{210}{38} = 5.53$$

8.12.2 Second moment of area of the composite section

For the case $n_r = 1$, the effects of the partial shear connection on the deflections would have to be considered as $\eta < 0.5$. Therefore only the case where $n_r = 2$ is considered here.

Assuming b_{eff} = 3.08 m (corresponding to $n_r = 2$), the values of the second moment of area (in equivalent steel units) are as follows:

For n_0 = 6.77, I_c = 137,100 cm^4 (z_{el} = 541 mm from bottom flange)

For n = 13.55, I_c = 117,800 cm^4 (z_{el} = 490 mm from bottom flange)

For n_d = 5.53, I_c = 141,600 cm^4 (z_{el} = 554 mm from bottom flange)

8.12.3 Vertical deflections

For the appropriate combination of actions, the deflections are:

Deflections of steel beam due to permanent loads applied during construction

$$w_{g,a} = \frac{5 g_1 L^4}{384 E I_y}$$

$$g_1 = 3.5 g_{k,1} + g_{k,2} = (3.5 \times 2.53) + 1.0 = 9.86 \text{ kN/m}$$

$$w_{g1,a} = \frac{5 \times 9.86 \times 10^3 \times 12^4}{384 \times 210 \times 10^9 \times 41100 \times 10^{-8}} \times 10^3 = 30.8 \text{ mm}$$

Permanent actions on composite beam

$$w_g = \frac{5 g L^4}{384 E I}$$

$$g = 3.5 g_{k,3} = 3.5 \times 0.5 = 1.75 \text{ kN/m}$$

Variable actions on composite beam

$$w_q = \frac{5qL^4}{384EI}$$

$q = 11.6$ kN/m — Sheet 4

$$w_q = \frac{5 \times 11.6 \times 10^3 \times 12^4}{384 \times 210 \times 10^9 \times 117800 \times 10^{-8}} \times 10^3 = 12.7 \text{ mm}$$

Total deflection is, w_{Total} = 30.8 + 1.9 + 12.7 = 45.4 mm < L/200 = 60 mm — BS EN 1993-1-1 NA.2.23

Deflection due to variable actions is w_q = 12.7 mm < L/360 = 33 mm

8.12.4 SLS stress verification

To validate the assumptions used to calculate the vertical deflections, the stress in the steel and concrete should be calculated to ensure that neither material exceeds its limit at SLS.

Stress in steel section due to permanent loads applied during construction

$$\sigma_{G1,a} = \frac{g_1 L^2 z_{el}}{8 I_y} = \frac{9.86 \times 10^3 \times 12^2 \times 265 \times 10^{-3}}{8 \times 41100 \times 10^{-8}} \times 10^{-6} = 114.4 \text{ N/mm}^2$$

Stress in steel section due to actions on composite beam

$$\sigma_a = \frac{(g+q)L^2 z_{el}}{8I} = \frac{(1.75+11.6) \times 10^3 \times 12^2 \times 490 \times 10^{-3}}{8 \times 117800 \times 10^{-8}} \times 10^{-6} = 100.0 \text{ N/mm}^2$$

σ_a = 114.4+ 100.0 = 214.4 N/mm^2 < 275 N/mm²

Stress in concrete due to actions on composite beam

$$\sigma_c = \frac{(g+q)L^2 z_{el}}{8In} = \frac{(1.75+11.6) \times 10^3 \times 12^2 \times (529.1+130-490) \times 10^{-3}}{8 \times 117800 \times 10^{-8} \times 13.55} \times 10^{-6}$$

= 2.6 N/mm²

σ_c = 2.6 N/mm^2 < f_{cd} = 16.78 N/mm²

8.12.5 Natural Frequency

Actions considered when calculating the natural frequency of the composite beam:

g = 9.86 + 1.75 = 11.61 kN/m — Sheet 4

q = 1.16 kN/m — Sheet 4

The deflection under these actions is::

$$\delta_{G_1} = \frac{5(g+q)L^4}{384EI} = \frac{5 \times (11.61+1.16) \times 10^3 \times 12^4}{384 \times 210 \times 10^9 \times 141600 \times 10^{-8}} \times 10^3 = 11.6 \text{ mm}$$

The natural frequency of the beam is therefore:

$$f = \frac{18}{\sqrt{\delta}} = \frac{18}{\sqrt{11.6}} = 5.28 \text{ Hz}$$ — P354

As 5.28 Hz > 4 Hz, the beam is satisfactory for initial calculation purposes. However, the dynamic performance of the entire floor should be verified using a method such as the one in P354. — P354

9 Pinned column using a Class 3 section

References are to BS EN 1993-1-1: 2005, including its National Annex, unless otherwise stated.

9.1 Scope

The column shown in Figure 9.1 is pin-ended about both axes and has no intermediate restraint. Design the column in S355 steel.

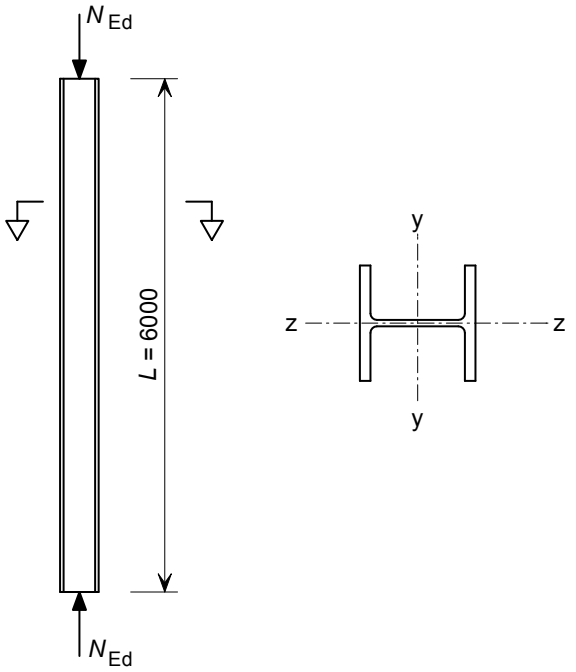

Figure 9.1

The design aspects covered in this example are:

- Cross section classification
- Cross-sectional resistance
  - Compression
- Buckling resistance
  - Flexural
  - Torsional
  - Torsional-flexural

9.2 Design value of force for Ultimate Limit State

Design compression force N_{Ed} = 3500 kN

9.3 Section properties

356 × 368 × 129 UKC in S355 steel
From section property tables:

Depth	h	=	355.6 mm	P363
Width	b	=	368.6 mm	
Web thickness	t_w	=	10.4 mm	
Flange thickness	t_f	=	17.5 mm	
Root radius	r	=	15.2 mm	
Depth between fillets	d	=	290.2 mm	
Radius of gyration y axis	i_y	=	15.6 cm	
Radius of gyration z axis	i_z	=	9.43 cm	
Torsional constant	I_T	=	153 cm^4	
Warping constant	I_w	=	4.18 dm^6	
Area	A	=	164 cm^2	
Modulus of elasticity	E	=	210 000 N/mm^2	3.2.6(1)
Shear modulus	G	≈	81 000 N/mm^2	

For buildings that will be built in the UK, the nominal values of the yield strength (f_y) and the ultimate strength (f_u) for structural steel should be those obtained from the product standard. Where a range is given, the lowest nominal value should be used. — NA.2.4

For S355 steel and $16 < t \leq 40$ mm — BS EN 10025-2 Table 7
Yield strength $f_y = R_{eH} = 345$ N/mm^2

9.4 Cross section classification

Table 5.2

$$\varepsilon = \sqrt{\frac{235}{f_y}} = \sqrt{\frac{235}{345}} = 0.83$$

Outstand of compression flange

$$c = \frac{b - t_w - 2r}{2} = \frac{368.6 - 10.4 - (2 \times 15.2)}{2} = 163.9 \text{ mm}$$

$$\frac{c}{t_f} = \frac{163.9}{17.5} = 9.37$$

The limiting value for Class 2 is $\frac{c}{t_f} \leq 10\varepsilon = 10 \times 0.83 = 8.30$

The limiting value for Class 3 is $\frac{c}{t_f} \leq 14\varepsilon = 14 \times 0.83 = 11.62$

$8.30 < 9.37 < 11.62$

Therefore the flange in compression is Class 3

Web subject to compression

$c = d = 290.2$ mm

$$\frac{c}{t_w} = \frac{290.2}{10.4} = 27.90$$

The limiting value for Class 1 is $\frac{c}{t_w} \leq 33\varepsilon = 33 \times 0.83 = 27.39$

The limiting value for Class 2 is $\frac{c}{t_f} \leq 38\varepsilon = 38 \times 0.83 = 31.54$

$27.39 < 27.90 < 31.54$

Therefore the web is Class 2 under compression.

Therefore the section is Class 3 under compression.

9.5 Partial factors for resistance

$\gamma_{M0} = 1.0$ NA.2.15

$\gamma_{M1} = 1.0$

9.6 Cross-sectional resistance

9.6.1 Compression resistance

Verify that:

$$\frac{N_{Ed}}{N_{c,Rd}} \leq 1.0$$ 6.2.4(1)

The design resistance of the cross section for uniform compression is:

$$N_{c,Rd} = \frac{Af_y}{\gamma_{M0}}$$ (For Class 1, 2 and 3 cross sections) 6.2.4(2) Eq (6.10)

$$N_{c,Rd} = \frac{Af_y}{\gamma_{M0}} = \frac{164 \times 10^2 \times 345}{1.0} \times 10^{-3} = 5658 \text{ kN}$$ 6.2.4(2) Eq (6.10)

$$\frac{N_{Ed}}{N_{c,Rd}} = \frac{3500}{5658} = 0.62 < 1.0$$ 6.2.4(1) Eq (6.9)

Therefore the compression resistance of the cross section is adequate.

9.7 Member buckling resistance

9.7.1 Buckling length

As the column is pin ended with no intermediate restraints, the buckling length (L_{cr}) may be taken as:

$L_{cr} = L = 6000$ mm

9.7.2 Flexural buckling resistance

The resistance to flexural buckling about the minor axis is the critical case in this example. Therefore the flexural buckling resistance ($N_{b,Rd}$) is determined for the *z-z* axis only.

Verify that

$$\frac{N_{Ed}}{N_{b,Rd}} \leq 1.0$$ 6.3.1.1(1) Eq (6.46)

The design buckling resistance is determined from:

$$N_{b,Rd} = \frac{\chi A f_y}{\gamma_{M1}} \text{ (For Class 1, 2 and 3 cross-sections)}$$ 6.3.1.1(3) Eq (6.47)

χ is the reduction factor for the buckling curve and is determined from: 6.3.1.2(1)

$$\chi = \frac{1}{\Phi + \sqrt{(\Phi^2 - \bar{\lambda}^2)}} \leq 1.0$$ Eq (6.49)

where:

$$\Phi = 0.5 + \left[1 + \alpha\left(\bar{\lambda} - 0.2\right) + \bar{\lambda}^2\right]$$

$\bar{\lambda}$ is the slenderness for flexural buckling

$$\bar{\lambda} = \sqrt{\frac{A f_y}{N_{cr}}} = \left(\frac{L_{cr}}{i}\right)\left(\frac{1}{\lambda_1}\right) \text{ (For Class 1, 2 and 3 cross-sections)}$$ 6.3.1.3(1) Eq (6.50)

$$\lambda_1 = 93.9\varepsilon = 93.9 \times 0.83 = 77.94$$

Slenderness for buckling about the minor axis (z-z)

$$\bar{\lambda}_z = \left(\frac{L_{cr}}{i_z}\right)\left(\frac{1}{\lambda_1}\right) = \left(\frac{6000}{94.3}\right)\left(\frac{1}{77.94}\right) = 0.82$$ Eq (6.50)

As, $\bar{\lambda}_z > 0.2$ and $\frac{N_{Ed}}{N_{c,Rd}} > 0.04$, the flexural buckling effects need to be considered. 6.3.1.2(4)

The appropriate buckling curve depends on *h*/*b*:

$$\frac{h}{b} = \frac{355.6}{368.6} = 0.96 < 1.2 \text{ and } t_f = 17.5 \text{ mm} < 100 \text{ mm}$$ Table 6.2

Therefore the buckling curve to consider for the *z-z* axis is *'c'*

For buckling curve *'c'* the imperfection factor is $\alpha = 0.49$ Table 6.1

Then:

$$\Phi = 0.5\left(1 + \alpha\left(\bar{\lambda}_z - 0.2\right) + \bar{\lambda}_z^2\right)$$
$$= 0.5 \times \left(1 + 0.49 \times \left(0.82 - 0.2\right) + 0.82^2\right) = 0.99$$ 6.3.1.2(1)

$$\chi = \frac{1}{\Phi + \sqrt{(\Phi^2 - \bar{\lambda}_z^2)}} = \frac{1}{0.99 + \sqrt{(0.99^2 - 0.82^2)}} = 0.65$$ Eq (6.49)

$0.65 < 1.0$

Therefore,

$\chi = 0.65$

The design resistance to flexural buckling is:

$$N_{b,Rd} = \frac{\chi_z A f_y}{\gamma_{M1}} = \frac{0.65 \times 164 \times 10^2 \times 345}{1.0} \times 10^{-3} = 3678 \text{ kN}$$ Eq (6.47)

$$\frac{N_{Ed}}{N_{b,Rd}} = \frac{3500}{3678} = 0.95 < 1.0$$

Therefore the flexural buckling resistance of the section is adequate.

9.7.3 Torsional and torsional-flexural buckling resistances

For open sections the possibility that the torsional or torsional-flexural buckling resistance may be less than the flexural buckling resistance should be considered. 6.3.1.4(1)

Doubly symmetrical sections do not suffer from torsional-flexural buckling. Therefore, here only the resistance of the UKC section to torsional buckling needs to be considered, as the section is doubly symmetric.

Thus, verify:

$$\frac{N_{Ed}}{N_{b,T,Rd}} \leq 1.0$$

where:

$N_{b,T,Rd}$ is the design resistance to torsional buckling

$$N_{b,T,Rd} = \frac{\chi_T A f_y}{\gamma_{M1}}$$ (For Class 1, 2 and 3 cross sections) Based on Eq (6.47)

$$\chi_T = \frac{1}{\Phi_T + \sqrt{(\Phi_T^2 - \bar{\lambda}_T^2)}} \leq 1.0$$ Based on Eq (6.49)

where:

$$\Phi_T = 0.5 + \left(1 + \alpha\left(\bar{\lambda}_T - 0.2\right) + \bar{\lambda}_T^2\right)$$

$\bar{\lambda}_T$ is the slenderness for Torsional buckling

$$\bar{\lambda}_T = \sqrt{\frac{A f_y}{N_{cr,T}}}$$ 6.3.1.4(2) Eq 6.52

$N_{cr,T}$ is the elastic torsional buckling force

$$N_{cr,T} = \left(\frac{1}{i_o^2}\right)\left(GI_T + \frac{\pi^2 E I_w}{L^2}\right)$$ P363 Page A-15

$$i_o = \sqrt{i_y^2 + i_z^2 + y_0^2}$$

y_0 is the distance from the shear centre to the centroid of the gross cross section along the *y-y* axis.

For doubly symmetric sections:

$y_0 = 0$

Therefore,

$$i_o = \sqrt{i_y^2 + i_z^2 + y_0^2} = \sqrt{156^2 + 94.3^2 + 0} = 182.29 \text{ mm}$$

$$N_{cr,T} = \left(\frac{1}{i_o^2}\right)\left(GI_T + \frac{\pi^2 EI_w}{L^2}\right)$$

$$= \left(\frac{1}{182.29^2}\right)\left((81000 \times 153 \times 10^4) + \frac{\pi^2 \times 210000 \times 4.18 \times 10^{12}}{6000^2}\right)$$

$$= 11 \times 10^6 \text{ N}$$

$$\bar{\lambda}_T = \sqrt{\frac{Af_y}{N_{cr,T}}} = \sqrt{\frac{164 \times 10^2 \times 345}{11 \times 10^6}} = 0.72$$ 6.3.1.4(2) Eq (6.52)

For torsional buckling, the buckling curve to be used may be obtained from Table 6.3 of BS EN 1993-1-1 considering the *z-z* axis. 6.3.1.4(3)

The appropriate buckling curve depends on *h*/*b*:

$$\frac{h}{b} = \frac{355.6}{368.6} = 0.96 < 1.2,\ t_f = 17.5 \text{ mm} < 100 \text{ mm and S355 steel}$$

Therefore, the buckling curve to consider for the *z-z* axis is *'c'* Table 6.2

For buckling curve *'c'* the imperfection factor is $\alpha = 0.49$ Table 6.1

Then:

$$\Phi_T = 0.5\left[1 + \alpha\left(\bar{\lambda}_T - 0.2\right) + \bar{\lambda}_T^2\right]$$ 6.3.1.2(1)

$$= 0.5 \times \left[1 + 0.49 \times \left(0.72 - 0.2\right) + 0.72^2\right] = 0.89$$

$$\chi_T = \frac{1}{\Phi_T + \sqrt{(\Phi_T^2 - \bar{\lambda}_T^2)}} = \frac{1}{0.89 + \sqrt{(0.89^2 - 0.72^2)}} = 0.71$$ Eq (6.49)

$0.71 < 1.0$

Therefore,

$\chi_T = 0.71$

The design resistance to torsional buckling is:

$$N_{b,T,Rd} = \frac{\chi_T Af_y}{\gamma_{M1}} = \frac{0.71 \times 164 \times 10^2 \times 345}{1.0} \times 10^{-3} = 4017 \text{ kN}$$ Based on Eq (6.47)

$$\frac{N_{Ed}}{N_{b,T,Rd}} = \frac{3500}{4017} = 0.87 < 1.0$$

Therefore the torsional buckling resistance is adequate.

9.8 Blue Book Approach

Page references in section 9.8 are to P363 unless otherwise stated.

The design resistances may be obtained from SCI publication P363.

Consider a 356 × 368 × 129 UKC in S355 steel

9.8.1 Design value of force for Ultimate Limit State

Design compression force N_{Ed} = 3500 kN

9.8.2 Cross-section classification

Under compression the cross section is at least Class 3. 6.2(a) & Pg D-11

9.8.3 Cross sectional resistance

Compression resistance

$N_{c,Rd} = N_{pl,Rd} = 5660$ kN Page D-161

$$\frac{N_{Ed}}{N_{c,Rd}} = \frac{3500}{5660} = 0.62 < 1.0$$

Therefore the compression resistance is adequate

9.8.4 Member buckling resistance

As the column is pin ended with no intermediate restraints, the buckling length about both axes (L_{cr}) may be taken as:

$L_{cr} = L = 6.0$ m

For a buckling length of 6.0 m, the flexural buckling resistances are: Page D-11

$N_{b,y,Rd}$ = 5010 kN (about the major axis)

$N_{b,z,Rd}$ = 3670 kN (about the minor axis)

For a buckling length of 6.0 m, the torsional buckling resistance is:

$N_{b,T,Rd}$ = 4040 kN

The critical buckling verification is:

$$\frac{N_{Ed}}{N_{b,z,Rd}} = \frac{3500}{3670} = 0.95 < 1.0$$

Therefore the buckling resistance is adequate

10 Pinned column with intermediate restraints

References are to BS EN 1993-1-1: 2005, including its National Annex, unless otherwise stated.

10.1 Scope

The column shown in Figure 10.1 has a tie at mid-height providing restraint about the z-z axis. Design the column in S275 steel.

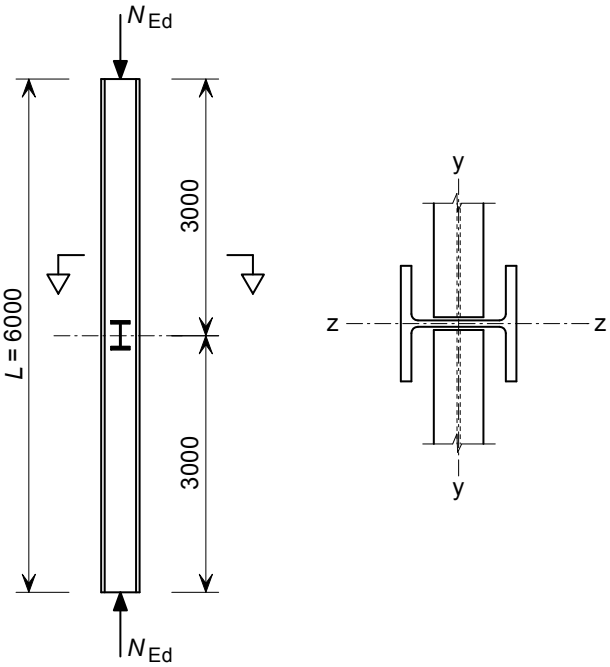

Figure 10.1

The design aspects covered in this example are:

- Cross section classification
- Cross-sectional resistance
  - Compression
- Buckling resistance
  - Flexural
  - Torsional
  - Torsional-flexural

10.2 Design value of force for Ultimate Limit State

Design compression force N_{Ed} = 2850 kN

10.3 Section properties

305 × 305 × 97 UKC in S275 steel

From section property tables:

Depth	h	=	307.9 mm	P363
Width	b	=	305.3 mm	
Web thickness	t_w	=	9.9 mm	
Flange thickness	t_f	=	15.4 mm	
Root radius	r	=	15.2 mm	
Depth between fillets	d	=	246.7 mm	
Radius of gyration y axis	i_y	=	13.4 cm	
Radius of gyration z axis	i_z	=	7.69 cm	
Torsional constant	I_T	=	91.2 cm^4	
Warping constant	I_w	=	1.56 dm^6	
Area	A	=	123 cm^2	
Modulus of elasticity	E	=	210 000 N/mm^2	3.2.6(1)
Shear modulus	G	≈	81 000 N/mm^2	

For buildings that will be built in the UK, the nominal values of the yield strength (f_y) and the ultimate strength (f_u) for structural steel should be those obtained from the product standard. Where a range is given, the lowest nominal value should be used. — NA.2.4

For S275 steel and t < 16 mm — BS EN 10025-2 Table 7

Yield strength $f_y = R_{eH}$ = 275 N/mm^2

10.4 Cross section classification

Table 5.2

$$\varepsilon = \sqrt{\frac{235}{f_y}} = \sqrt{\frac{235}{275}} = 0.92$$

Outstand of compression flange

$$c = \frac{b - t_w - 2r}{2} = \frac{305.9 - 9.9 - (2 \times 15.2)}{2} = 132.8 \text{ mm}$$

$$\frac{c}{t_f} = \frac{132.8}{15.4} = 8.6$$

The limiting value for Class 1 is $\frac{c}{t_f} \le 9\varepsilon = 9 \times 0.92 = 8.3$

The limiting value for Class 2 is $\frac{c}{t_f} \le 10\varepsilon = 10 \times 0.92 = 9.2$

98.3 < 8.6 < 9.2

Therefore the flange is Class 2.

Web subject to compression

$c = d = 246.7$ mm

$$\frac{c}{t_w} = \frac{246.7}{9.9} = 24.9$$

The limiting value for Class 1 is $\frac{c}{t_w} \leq 33\varepsilon = 33 \times 0.92 = 30.4$

$24.9 < 30.4$

Therefore the web is Class 1 under compression.

Therefore the cross section is Class 2 under compression.

10.5 Partial factors for resistance

$\gamma_{M0} = 1.0$ NA.2.15

$\gamma_{M1} = 1.0$

10.6 Cross-sectional resistance

10.6.1 Compression resistance

Verify that:

$$\frac{N_{Ed}}{N_{c,Rd}} \leq 1.0$$ 6.2.4(1)

The design resistance of the cross section for compression is:

$$N_{c,Rd} = \frac{A \times f_y}{\gamma_{M0}}$$ (For Class 1, 2 and 3 cross sections) 6.2.4(2) Eq (6.10)

$$N_{c,Rd} = \frac{A \times f_y}{\gamma_{M0}} = \frac{12300 \times 275}{1.0} \times 10^{-3} = 3383 \text{ kN}$$ 6.2.4(2) Eq (6.10)

$$\frac{N_{Ed}}{N_{c,Rd}} = \frac{2850}{3383} = 0.84 < 1.0$$ 6.2.4(1) Eq (6.9)

Therefore the compression resistance of the cross section is adequate.

10.7 Member buckling resistance

10.7.1 Buckling length

The member is effectively held in position at both ends, but not restrained in direction at either end. The tie provides restraint in position only for buckling about the z-z axis (i.e. the member is not restrained in direction by the tie). Torsional restraint is also provided by the tie. Therefore the buckling lengths are:

About the *y-y* axis $L_{cr,y} = L = 6000$ mm

About the *z-z* axis $L_{cr,z} = \frac{L}{2} = 3000$ mm

10.7.2 Flexural buckling resistance

Verify that: — 6.3.1.1(1) Eq (6.46)

$$\frac{N_{Ed}}{N_{b,Rd}} \leq 1.0$$

The design buckling resistance is determined from: — 6.3.1.1(3) Eq (6.47)

$$N_{b,Rd} = \frac{\chi A f_y}{\gamma_{M1}} \text{ (For Class 1, 2 and 3 cross sections)}$$

χ is the reduction factor for the buckling curve and is determined from: — 6.3.1.2(1)

$$\chi = \frac{1}{\Phi + \sqrt{(\Phi^2 - \bar{\lambda}^2)}} \leq 1.0$$ — Eq (6.49)

where:

$$\Phi = 0.5 + \left[1 + \alpha\left(\bar{\lambda} - 0.2\right) + \bar{\lambda}^2\right]$$

$\bar{\lambda}$ is the slenderness for flexural buckling

$$\bar{\lambda} = \sqrt{\frac{A f_y}{N_{cr}}} = \left(\frac{L_{cr}}{i}\right)\left(\frac{1}{\lambda_1}\right) \text{ (For Class 1, 2 and 3 cross sections)}$$ — 6.3.1.3(1) Eq (6.50)

$$\lambda_1 = 93.9\varepsilon = 93.9 \times 0.92 = 86.39$$

Slenderness for buckling about the minor axis (z-z)

$$\bar{\lambda}_z = \left(\frac{L_{cr,z}}{i_z}\right)\left(\frac{1}{\lambda_1}\right) = \left(\frac{3000}{76.9}\right)\left(\frac{1}{86.39}\right) = 0.45$$ — Eq (6.50)

Slenderness for buckling about the major axis (y-y)

$$\bar{\lambda}_y = \left(\frac{L_{cr,y}}{i_y}\right)\left(\frac{1}{\lambda_1}\right) = \left(\frac{6000}{134}\right)\left(\frac{1}{86.39}\right) = 0.52$$ — Eq (6.50)

As both $\bar{\lambda}_z$ and $\bar{\lambda}_y$ are greater than 0.2 and $\frac{N_{Ed}}{N_{c,Rd}} > 0.04$ the effects of flexural buckling need to be considered. — 6.3.1.2(4)

The appropriate buckling curve depends on *h*/*b*: — Table 6.2

$$\frac{h}{b} = \frac{307.9}{305.3} = 1.01 < 1.2,\ t_f = 15.4 \text{ mm} < 100 \text{ mm and S275 steel}$$

Therefore:

The buckling curve to consider for the *z-z* axis is '*c*'

The buckling curve to consider for the *y-y* axis is '*b*'

For buckling curve '*c*' the imperfection factor for the *z-z* axis is: Table 6.1

$\alpha_z = 0.49$

For buckling curve '*b*' the imperfection factor for the *y-y* axis is:

$\alpha_y = 0.34$

Minor axis (z-z)

$$\Phi_z = 0.5\left[1+\alpha_z\left(\bar{\lambda}_z - 0.5\right)+\bar{\lambda}_z^{\,2}\right]$$ 6.3.1.2(1)

$$= 0.5\times\left[1+0.49\times\left(0.45-0.2\right)+0.45^2\right] = 0.66$$

$$\chi_z = \frac{1}{(\Phi_z + \sqrt{(\Phi_z^{\,2} - \bar{\lambda}_z^{\,2})}} = \frac{1}{0.66+\sqrt{(0.66^2 - 0.45^2)}} = 0.88$$ Eq (6.49)

$0.88 < 1.0$

Therefore,

$\chi_z = 0.88$

Major axis (y-y)

$$\Phi_y = 0.5\left[1+\alpha_y\left(\bar{\lambda}_y - 0.2\right)+\bar{\lambda}_y^{\,2}\right]$$ 6.3.1.2(1)

$$= 0.5\times\left[1+0.34\times\left(0.52-0.2\right)+0.52^2\right] = 0.69$$

$$\chi_y = \frac{1}{(\Phi_y + \sqrt{(\Phi_y^{\,2} - \bar{\lambda}_y^{\,2})}} = \frac{1}{0.69+\sqrt{(0.69^2 - 0.52^2)}} = 0.87$$ Eq (6.49)

$0.87 < 1.0$

Therefore,

$\chi_y = 0.87$

Therefore the more onerous effects are for buckling about the *y-y* axis. The design buckling resistance is: Eq (6.47)

$$N_{b,Rd} = \frac{\chi_y A f_y}{\gamma_{M1}} = \frac{0.87\times 12300\times 275}{1.0}\times 10^{-3} = 2943 \text{ kN}$$

$$\frac{N_{Ed}}{N_{b,Rd}} = \frac{2850}{2943} = 0.97 < 1.0$$

Therefore the flexural buckling resistance of the section is adequate.

10.7.3 Torsional and torsional-flexural buckling resistance

For open sections, the possibility that the torsional or torsional-flexural buckling resistance may be less than the flexural buckling resistance should be considered. 6.3.1.4(1)

Doubly symmetrical sections do not suffer from torsional-flexural buckling. Therefore, here only the resistance of the UKC section to torsional buckling needs to be considered as the section is doubly symmetric.

Thus, verify:

$$\frac{N_{Ed}}{N_{b,T,Rd}} \leq 1.0$$

where:

$N_{b,T,Rd}$ is the design resistance to torsional buckling

$$N_{b,T,Rd} = \frac{\chi_T A f_y}{\gamma_{M1}}$$ (For Class 1, 2 and 3 cross sections)

Based on Eq (6.47)

$$\chi_T = \frac{1}{\Phi_T + \sqrt{(\Phi_T^2 - \bar{\lambda}_T^2)}} \leq 1.0$$

Based on Eq (6.49)

where:

$$\Phi_T = 0.5 + \left(1 + \alpha\left(\bar{\lambda}_T - 0.2\right) + \bar{\lambda}_T^2\right)$$

$\bar{\lambda}_T$ is the slenderness for Torsional buckling

$$\bar{\lambda}_T = \sqrt{\frac{A f_y}{N_{cr,T}}}$$

6.3.1.4(2) Eq 6.52

$N_{cr,T}$ is the elastic torsional buckling force

$$N_{cr,T} = \left(\frac{1}{i_o^2}\right)\left(GI_T + \frac{\pi^2 EI_w}{L^2}\right)$$

P363, 6.1(ii)

$$i_o = \sqrt{i_y + i_z + y_0}$$

y_0 is the distance from the shear centre to the centroid of the gross cross section along the *y-y* axis.

For doubly symmetric sections:

$$y_0 = 0$$

Therefore,

$$i_o = \sqrt{i_y + i_z + y_0} = \sqrt{134^2 + 76.9^2 + 0} = 154.50 \text{ mm}^2$$

$$N_{cr,T} = \left(\frac{1}{i_o^2}\right)\left(GI_T + \frac{\pi^2 EI_w}{L^2}\right)$$

$$= \left(\frac{1}{154.5^2}\right)\left((81000 \times 91.2 \times 10^4) + \frac{\pi^2 \times 210000 \times 1.56 \times 10^{12}}{3000^2}\right)$$

$$= 18.1 \times 10^3 \text{ N}$$

$$\bar{\lambda}_T = \sqrt{\frac{A f_y}{N_{cr,T}}} = \sqrt{\frac{123 \times 10^2 \times 275}{18.1 \times 10^3}} = 0.43$$

6.3.1.4(2) Eq 6.52

For torsional buckling, the buckling curve to be used may be obtained from Table 6.3 of BS EN 1993-1-1 considering the *z-z* axis. — 6.3.1.4(3)

The appropriate buckling curve depends on *h*/*b*:

$$\frac{h}{b} = \frac{307.6}{305.3} = 1.01 < 1.2,\ t_f = 17.5 \text{ mm} < 100 \text{ mm and S275 steel}$$

For S275,the buckling curve to consider for the *z-z* axis is *'c'* — Table 6.2

For buckling curve *'c'* the imperfection factor is — Table 6.1

$\alpha_z = 0.49$

$$\Phi_T = 0.5\left[1 + \alpha\left(\bar{\lambda}_T - 0.2\right) + \bar{\lambda}_T^{\,2}\right]$$ — 6.3.1.2(1)

$$= 0.5 \times \left[1 + 0.49 \times \left(0.43 - 0.2\right) + 0.43^2\right] = 0.65$$

$$\chi_T = \frac{1}{\Phi_T + \sqrt{(\Phi_T^{\,2} - \bar{\lambda}_T^{\,2})}} = \frac{1}{0.65 + \sqrt{(0.65^2 - 0.43^2)}} = 0.88$$ — Eq (6.49)

$0.88 < 1.0$

Therefore,

$\chi_T = 0.88$

The design resistance torsional buckling is:

$$N_{b,T,Rd} = \frac{\chi_T A f_y}{\gamma_{M1}} = \frac{0.88 \times 123 \times 10^2 \times 275}{1.0} \times 10^{-3} = 2977 \text{ kN}$$ — Based on Eq (6.47)

$$\frac{N_{Ed}}{N_{b,T,Rd}} = \frac{2850}{2977} = 0.96 < 1.0$$

Therefore the torsional buckling resistance is adequate.

10.8 Blue Book Approach

The design resistances may be obtained from SCI publication P363.

Consider 305 × 305 × 97 UKC in S275 steel

Page references in Section 10.8 are to P363 unless otherwise stated.

10.8.1 Design value of force for Ultimate Limit State

Design compression force $N_{Ed} = 2850$ kN

10.8.2 Cross section classification

Under compression the cross section is at least Class 3. — 6.2(a) & Pg C-12

10.8.3 Cross-sectional resistance

Compression resistance

$N_{c,Rd} = 3380$ kN

Page C-162

$$\frac{N_{Ed}}{N_{c,Rd}} = \frac{2850}{3380} = 0.84 < 1.0$$

Therefore the compression resistance is adequate.

10.8.4 Member buckling resistance

The buckling lengths may be taken as:

About the major (y-y) axis $L_{cr,y} = 6.0$ m

About the minor (z-z) axis $L_{cr,z} = 3.0$ m

The flexural buckling resistances are:

Page C-12

For buckling about the minor axis with a buckling length of 3.0 m,

$N_{b,z,Rd} = 2950$ kN

For buckling about the major axis with a buckling length of 6.0 m,

$N_{b,y,Rd} = 2970$ kN

For a buckling length of 3.0 m, the torsional buckling resistance is:

$N_{b,T,Rd} = 2980$ kN

The critical buckling verification is

$$\frac{N_{Ed}}{N_{b,z,Rd}} = \frac{2850}{2950} = 0.97 < 1.0$$

Therefore the buckling resistance is adequate

11 Biaxial bending and compression of a Class 1/2 section

References are to BS EN 1993-1-1: 2005 Unless otherwise stated.

11.1 Scope

Verify the adequacy of a 203 × 203 × 46 UKC in S275 steel shown in Figure 11.1 to resist combined bending and compression.

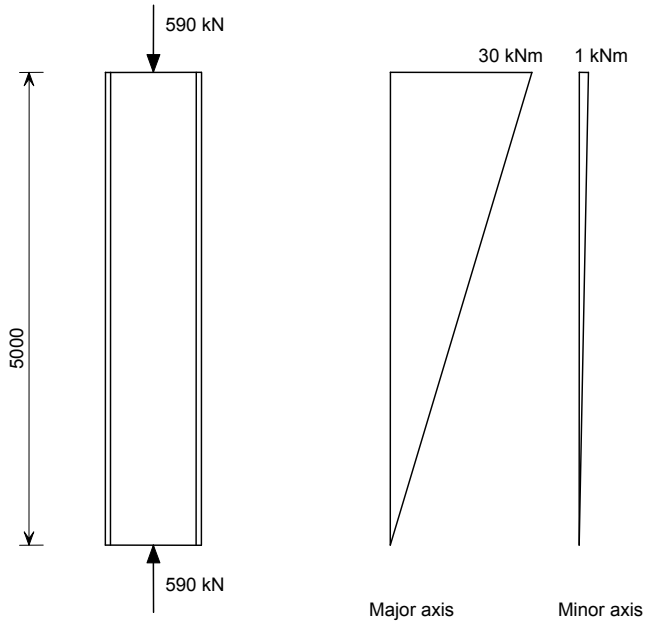

Figure 11.1

The design aspects covered in this example are:

- Cross section classification
- Cross-sectional resistance
  - Compression
  - Bending
- Buckling resistance under bending and compression

11.2 Design bending moments and compression force

Design bending moment about the *y-y* axis	$M_{y,Ed}$	= 30 kNm
Design bending moment about the *z-z* axis	$M_{z,Ed}$	= 1 kNm
Design compression force	N_{Ed}	= 590 kN

11.3 Section properties

203 × 203 × 46 UKC in S275 steel

From section property tables: P363

Depth	h	= 203.2 mm
Width	b	= 203.6 mm
Web thickness	t_w	= 7.2 mm
Flange thickness	t_f	= 11.0 mm
Root radius	r	= 10.2 mm
Depth between fillets	d	= 160.8 mm
Radius of gyration y-y axis	i_y	= 8.82 cm
Radius of gyration z-z axis	i_z	= 5.13 cm
Plastic modulus y-y axis	$W_{pl,y}$	= 497 cm^3
Plastic modulus z-z axis	$W_{pl,z}$	= 231 cm^3
Area	A	= 58.7 cm^2
Modulus of elasticity	E	= 210 000 N/mm^2 3.2.6(1)

For buildings that will be built in the UK, the nominal values of the yield strength (f_y) and the ultimate strength (f_u) for structural steel should be those obtained from the product standard. Where a range is given, the lowest nominal value should be used. NA.2.4

For S275 steel and $t \leq 16$ mm BS EN 10025-2 Table 7

Yield strength $f_y = R_{eH} = 275$ N/mm^2

11.4 Cross section classification

Table 5.2

$$\varepsilon = \sqrt{\frac{235}{f_y}} = \sqrt{\frac{235}{275}} = 0.92$$

Outstand of compression flange

$$c = \frac{b - t_w - 2r}{2} = \frac{203.6 - 7.2 - (2 \times 10.2)}{2} = 88.0 \text{ mm}$$

$$\frac{c}{t_f} = \frac{88}{11} = 8$$

The limiting value for Class 1 is $\frac{c}{t_f} \leq 9\varepsilon = 9 \times 0.92 = 8.28$

$8 < 8.28$

Therefore the flange is Class 1.

Web subject to bending and compression

$c = d = 160.8$ mm

$$\frac{c}{t_w} = \frac{160.8}{7.2} = 22.33$$

$$\alpha = 0.5\left[1+\left(\frac{N_{Ed}}{f_y t_w d}\right)\right] = 0.5\times\left[1+\left(\frac{590000}{275\times 7.2\times 160.8}\right)\right] = 1.43$$

but $-1 < \alpha \le 1$

Therefore $\alpha = 1.0$

As $\alpha > 0.5$, the limiting value for Class 1 is

$$\frac{c}{t_w} \le \frac{396\varepsilon}{13\alpha - 1} = \frac{396\times 0.92}{(13\times 1.0)-1} = 30.36$$

$22.33 < 30.36$

Therefore the web is Class 1 under bending and compression.

Therefore the cross section is Class 1 under bending and compression.

11.5 Partial factors for resistance

$\gamma_{M0} = 1.0$ NA.2.15

$\gamma_{M1} = 1.0$

11.6 Cross-sectional resistance

11.6.1 Compression resistance

Verify that:

$$\frac{N_{Ed}}{N_{c,Rd}} \le 1.0$$ 6.2.4(1)

The design resistance of the cross section for compression is:

$$N_{c,Rd} = \frac{Af_y}{\gamma_{M0}}$$ (For Class 1, 2 and 3 cross sections) 6.2.4(2) Eq (6.10)

$$N_{c,Rd} = \frac{Af_y}{\gamma_{M0}} = \frac{5870\times 275}{1.0}\times 10^{-3} = 1614.3 \text{ kN}$$

$$\frac{N_{Ed}}{N_{c,Rd}} = \frac{590}{1614.3} = 0.37 < 1.0$$ 6.2.4(1) Eq (6.9)

Therefore the compression resistance of the cross section is adequate.

11.6.2 Resistance to bending

For members subject to biaxial bending verify that:

$$\left(\frac{M_{y,Ed}}{M_{N,y,Ed}}\right)^{\alpha} + \left(\frac{M_{z,Ed}}{M_{N,z,Ed}}\right)^{\beta} \leq 1.0$$ 6.2.9.1(6)

For doubly symmetrical Class 1 and 2 I and H sections. 6.2.9.1(4)

Consider whether an allowance needs to be made for the effect of the axial force on the plastic moment resistance.

For bending about the *y-y* axis – both criteria must be satisfied for the effect of the axial compression to be neglected.

$N_{Ed} \leq 0.25 \times N_{pl,Rd}$ and $N_{Ed} \leq \dfrac{0.5 h_w t_w f_y}{\gamma_{M0}}$

$0.25N_{p.,Rd} = 0.25 \times 1614.3 = 403.6 \text{ kN} < 590 \text{ kN}$

As this verification fails, the second verification does not need to be carried out.

Therefore the effect of the axial force needs to be allowed for in bending about the *y-y* axis.

For bending about the *z-z* axis - the effect of the axial force may be neglected when:

$$N_{Ed} \leq \frac{h_w t_w f_y}{\gamma_{M0}}$$

$h_w = h - 2t_f = 203.2 - 2 \times 11.0 = 181.2 \text{ mm}$

$$\frac{h_w t_w f_y}{\gamma_{M0}} = \frac{181 \times 7.2 \times 275}{1.0} \times 10^{-3} = 358.8 \text{ kN}$$

$N_{Ed} = 590 \text{ kN} > 358.8 \text{ kN}$

Therefore the effect of the axial force needs to be allowed for in bending about the *z-z* axis.

The design plastic moment resistance for the major axis (*y-y*) is:

$$M_{pl,y,Rd} = \frac{W_{pl,y} f_y}{\gamma_{M0}} = \frac{497 \times 10^3 \times 275}{1.0} \times 10^{-6} = 136.7 \text{ kNm}$$ 6.2.9.1(2)

The design plastic moment resistance for the minor axis (*z-z*) is:

$$M_{pl,z,Rd} = \frac{W_{pl,z} f_y}{\gamma_{M0}} = \frac{231 \times 10^3 \times 275}{1.0} \times 10^{-6} = 63.5 \text{ kNm}$$ 6.2.9.1(2)

Design plastic moment resistance reduced due to the effects of the axial force may be found using the following approximations.

$$M_{N,y,Rd} = M_{pl,y,Rd}\left(\frac{1-n}{1-0.5a}\right) \text{ but } M_{N,y,Rd} \leq M_{pl,y,Rd}$$ 6.2.9.1(5)

where:

$$n = \frac{N_{Ed}}{N_{pl,Rd}} = \frac{590.0}{1614.3} = 0.37$$

$$a = \frac{A - 2bt_f}{A} \text{ but } a \le 0.5$$

$$a = \frac{5870 - (2 \times 203.6 \times 11.0)}{5870} = 0.24 < 0.5$$

$$M_{N,y,Rd} = M_{pl,y,Rd}\left(\frac{1-n}{1-0.5a}\right) = 136.7 \times \left(\frac{1-0.37}{1-(0.5 \times 0.24)}\right) = 97.9 \text{ kNm}$$

97.9 kNm < $M_{pl,y,Rd}$ (136.7 kNm)

Therefore,

$M_{N,y,Rd}$ = 97.9 kNm

As $n > a$

$$M_{N,z,Rd} = M_{pl,z,Rd}\left[1-\left(\frac{n-a}{1-a}\right)^2\right] = 63.5 \times \left[1-\left(\frac{0.37-0.24}{1-0.24}\right)^2\right] = 61.6 \text{ kNm}$$ 6.2.9.1(5)

For biaxial bending of I and H sections 6.2.9.1(6)

$\alpha = 2$

$\beta = 5n$ but $\beta \ge 1.0$

$\beta = 5 \times 0.37 = 1.85 > 1.0$

Then:

$$\left(\frac{30}{97.9}\right)^2 + \left(\frac{1.0}{61.6}\right)^{1.85} = 0.09 < 1.0$$ Eq (6.41)

Therefore the resistance to combined bending and axial force is adequate.

11.7 Buckling resistance

11.7.1 Buckling length

The buckling lengths may be taken as:

Major axis $L_{y,cr} = L = 5000$ mm

Minor axis $L_{z,cr} = L = 5000$ mm

11.7.2 Combined bending and compression

Verify that:

$$\frac{N_{Ed}}{\chi_y N_{Rk} / \gamma_{M1}} + k_{yy}\frac{M_{y.Ed} + \Delta M_{y.Ed}}{\chi_{LT}(M_{y.Rk} / \gamma_{M1})} + k_{yz}\frac{M_{z.Ed} + \Delta M_{z.Ed}}{M_{z.Rk} / \gamma_{M1}} \le 1.0$$ Eq (6.61)

And:

$$\frac{N_{Ed}}{\chi_z N_{Rk}/\gamma_{M1}} + k_{zy}\frac{M_{y.Ed} + \Delta M_{y.Ed}}{\chi_{LT}(M_{y.Rk}/\gamma_{M1})} + k_{zz}\frac{M_{z.Ed} + \Delta M_{z.Ed}}{M_{z.Rk}/\gamma_{M1}} \leq 1.0$$ Eq (6.62)

where:

χ_y, χ_z are the reduction factors for flexural buckling about the major and minor axes

χ_{LT} is the reduction factor for lateral-torsional buckling

k_{yy}, k_{yz}, k_{zz} and k_{zy} are the interaction factors

For Class 1 cross sections: Table 6.7

$N_{Rk} = Af_y = 5870 \times 275 \times 10^{-3} = 1614.3$ kN

$M_{y,Rk} = W_{pl,y}f_y = 497 \times 10^3 \times 275 \times 10^{-6} = 136.7$ kNm

$M_{z,Rk} = W_{pl,z}f_y = 231 \times 10^3 \times 275 \times 10^{-6} = 63.5$ kNm

$\Delta M_{y,Ed} = 0.0$ kNm (section is not Class 4)

$\Delta M_{z,Ed} = 0.0$ kNm (section is not Class 4).

Reduction factor for flexural buckling

The reduction factor for flexural buckling is determined from:

$$\chi = \frac{1}{\left(\Phi + \sqrt{\left(\Phi^2 - \bar{\lambda}^2\right)}\right)} \leq 1.0$$ Eq (6.49)

where:

$$\Phi = 0.5 + \left[1 + \alpha\left(\bar{\lambda} - 0.2\right) + \bar{\lambda}^2\right]$$

$\bar{\lambda}$ is the non-dimensional slenderness for flexural buckling

$$\bar{\lambda} = \sqrt{\frac{Af_y}{N_{cr}}} = \left(\frac{L_{cr}}{i}\right)\left(\frac{1}{\lambda_1}\right)$$ (For Class 1, 2 and 3 cross sections) 6.3.1.3(1) Eq (6.50)

$\lambda_1 = 93.9\varepsilon = 93.9 \times 0.92 = 86.39$

Flexural buckling about the minor axis (z-z)

$$\bar{\lambda}_z = \left(\frac{L_{cr}}{i_z}\right)\left(\frac{1}{\lambda_1}\right) = \left(\frac{5000}{51.3}\right) \times \left(\frac{1}{86.39}\right) = 1.13$$ Eq (6.50)

The appropriate buckling curve depends on h/b and steel grade:

$$\frac{h}{b} = \frac{203.2}{203.6} = 1.0 < 1.2,\ t_f = 11.0 \text{ mm} < 100 \text{ mm}$$ Table 6.2

Therefore, for S275, the buckling curve to consider for the z-z axis is 'c'

For buckling curve 'c' $\alpha_z = 0.49$ Table 6.1

$$\Phi_z = 0.5\left[1 + \alpha_z\left(\bar{\lambda}_z - 0.2\right) + \bar{\lambda}_z^2\right]$$ 6.3.1.2(1)

$$= 0.5 \times \left[1 + 0.49 \times \left(1.13 - 0.2\right) + 1.13^2\right] = 1.37$$

$$\chi_z = \frac{1}{(\Phi_z + \sqrt{(\Phi_z^2 - \bar{\lambda}_z^2)}} = \frac{1}{1.37 + \sqrt{(1.37^2 - 1.13^2)}} = 0.47$$ Eq (6.49)

$0.47 < 1.0$

Therefore,

$\chi_z = 0.47$

Buckling about the major axis (y-y)

$$\bar{\lambda}_y = \left(\frac{L_{cr}}{i_y}\right)\left(\frac{1}{\lambda_1}\right) = \left(\frac{5000}{88.2}\right) \times \left(\frac{1}{86.39}\right) = 0.66$$ Eq (6.50)

The appropriate buckling curve depends on h/b:

$$\frac{h}{b} = \frac{203.2}{203.6} = 1.0 < 1.2,\ t_f = 11.0 \text{ mm} < 100 \text{ mm}$$ Table 6.2

Therefore, for S275, the buckling curve to consider for the *y-y* axis is '*b*'

For buckling curve '*b*' $\alpha_y = 0.34$ Table 6.1

$$\Phi_y = 0.5\left[1 + \alpha_y\left(\bar{\lambda}_y - 0.2\right) + \bar{\lambda}_y^2\right]$$ 6.3.1.2(1)

$$= 0.5 \times \left[1 + 0.34 \times \left(0.66 - 0.2\right) + 0.66^2\right] = 0.80$$

$$\chi_y = \frac{1}{(\Phi_y + \sqrt{(\Phi_y^2 - \bar{\lambda}_y^2)}} = \frac{1}{0.80 + \sqrt{(0.80^2 - 0.66^2)}} = 0.80$$ Eq (6.49)

$0.8 < 1.0$

Therefore,

$\chi_y = 0.8$

Reduction factor for lateral-torsional buckling

As a UKC is being considered, the method given in 6.3.2.3 for determining the reduction factor for lateral-torsional buckling (χ_{LT}) of rolled sections is used.

$$\chi_{LT} = \frac{1}{\Phi_{LT} + \sqrt{\Phi_{LT}^2 - \beta\bar{\lambda}_{LT}^2}} \quad \text{but} \le 1.0 \text{ and} \le \frac{1}{\bar{\lambda}_{LT}^2}$$ 6.3.2.3(1) Eq (6.57)

where:

$$\Phi_{LT} = 0.5\left(1 + \alpha_{LT}\left(\bar{\lambda}_{LT} - \bar{\lambda}_{LT,0}\right) + \beta\bar{\lambda}_{LT}^2\right)$$

$\lambda_{LT,0} = 0.4$ and $\beta = 0.75$ NA.2.17

The appropriate buckling curve depends on h/b:

$\frac{h}{b} = 1.0 < 2$ therefore use curve '*b*' NA.2.17

For buckling curve '*b*' $\alpha_{LT} = 0.34$ NA.2.16 & Table 6.3

$$\bar{\lambda}_{LT} = \sqrt{\frac{W_y f_y}{M_{cr}}}$$ 6.3.2.2(1)

BS EN1993-1-1 does not give a method for determining the elastic critical moment for lateral-torsional buckling (M_{cr}). The approach given in SCI publication P362 is used to determine $\bar{\lambda}_{LT}$.

It should be noted that the approach for determining $\bar{\lambda}_{LT}$ given in SCI P362 is conservative; other approaches that may be used are:

- Determine M_{cr} from either:
  - Hand calculations
  - Software programmes e.g. '*LTBeam*'
- Determine $\bar{\lambda}_{LT}$ using the more exact method, see Example 4.

Using the P362 method: P362 5.6.2.1(5)

$$\bar{\lambda}_{LT}. = \left(\frac{1}{\sqrt{C_1}}\right) 0.9\bar{\lambda}\sqrt{\beta_w}$$

Based on the bending moment diagram in Figure 11.1 P362 Table 5.5

$$\frac{1}{\sqrt{C_1}} = 0.75$$

λ_1 = 86 (for S275 Steel) P362 Table 5.2

$$\bar{\lambda}_z = \left(\frac{L_z}{i_z}\right)\left(\frac{1}{\lambda_1}\right) = \left(\frac{5000}{51.3}\right) \times \left(\frac{1}{86}\right) = 1.13$$

For Class 1 and 2 sections

$\beta_w = 1.00$

$$\bar{\lambda}_{LT} = \left(\frac{1}{\sqrt{C_1}}\right) 0.9\bar{\lambda}\sqrt{\beta_w} = 0.75 \times 0.9 \times 1.13 \times \sqrt{1} = 0.76$$

$$\Phi_{LT} = 0.5\left[1 + \alpha_{LT}\left(\bar{\lambda}_{LT} - \bar{\lambda}_{LT,0}\right) + \beta\bar{\lambda}_{LT}^2\right]$$ 6.3.2.3(1)

$$= 0.5 \times [1 + 0.34 \times (0.76 - 0.4) + (0.75 \times 0.76^2)] = 0.78$$

$$\chi_{LT} = \frac{1}{\Phi_{LT} + \sqrt{\Phi_{LT}^2 - \beta\bar{\lambda}_{LT}^2}}$$ Eq (6.57)

$$\chi_{LT} = \frac{1}{0.78 + \sqrt{0.78^2 - (0.75 \times 0.76^2)}} = 0.83$$

$$\frac{1}{\bar{\lambda}_{LT}^2} = \frac{1}{0.76^2} = 1.73$$

$0.83 < 1.0 < 1.78$ 6.3.2.3(2)

Therefore,

$\chi_{LT} = 0.83$ Eq (6.58)

To account for the bending moment distribution between restraints, χ_{LT} may be modified as follows:

$$\chi_{LT,mod} = \frac{\chi_{LT}}{f} \text{ but } \chi_{LT,mod} \leq 1.0$$

$$f = 1 - 0.5(1 - k_c)[1 - 2(\bar{\lambda}_{LT} - 0.8)^2] \text{ but } f \leq 1.0$$ 6.3.2.3(2)

$$k_c = \frac{1}{\sqrt{C_1}}$$ NA.2.18

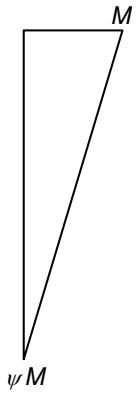

For the above major axis bending moment diagram

$\psi = 0.0$ therefore,

$$k_c = \frac{1}{\sqrt{C_1}} = 0.75$$ Access Steel SN002 Table 2.1

$$f = 1 - 0.5 \times (1 - 0.75) \times [1 - 2 \times (0.76 - 0.8)^2] = 0.88$$ 6.3.2.3(2)

$0.88 < 1.0$

Therefore,

$f = 0.88$

Thus,

$$\chi_{LT,mod} = \frac{0.83}{0.88} = 0.94$$ Eq (6.58)

$0.94 < 1.0$

Therefore,

$\chi_{LT,mod} = 0.94$

Interaction factors (k_{yi} & k_{zi})

The interaction factors are determined from either Annex A (method 1) or Annex B (method 2) of BS EN 1993-1-1. For doubly symmetric sections, the UK National Annex allows the use of either method. NA.2.21

Here the method given in Annex B is used, which is recommended for hand calculations.

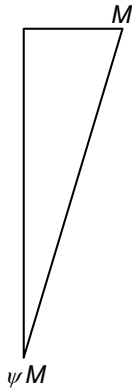

From the bending moment diagrams for both the *y-y* and *z-z* axes, $\psi = 0.0$

Therefore

Table B.3

$C_{my} = C_{mz} = C_{mLT} = 0.6 + (0.4 \times 0) = 0.6$

For members susceptible to torsional deformations, the expressions given in Table B.2 should be used to calculate the interaction factors.

Factor k_{yy}

Table B.2 refers to the expression given in Table B.1.

For Class 1 and 2 sections.

$$k_{yy} = C_{my}\left\{1 + (\bar{\lambda}_y - 0.2)\left(\frac{N_{Ed}}{\chi_y N_{Rk} / \gamma_{M1}}\right)\right\} \le C_{my}\left\{1 + 0.8\left(\frac{N_{Ed}}{\chi_y N_{Rk} / \gamma_{M1}}\right)\right\}$$

Table B.1

$$0.6 \times \left\{1 + (0.66 - 0.2)\left(\frac{590}{(0.8 \times 1614.3)/1}\right)\right\} = 0.73$$

$$0.6\left\{1 + 0.8 \times \left(\frac{590}{(0.8 \times 1614.3)/1}\right)\right\} = 0.82$$

$0.73 < 0.82$

Therefore

$k_{yy} = 0.73$

Factor k_{zz}

Table B.2 refers to the expression given in Table B.1.

For Class 1 and 2 I sections.

$$k_{zz} = C_{mz}\left\{1 + \left(2\bar{\lambda}_z - 0.6\right)\left[\frac{N_{Ed}}{\chi_z N_{Rk} / \gamma_{M1}}\right]\right\} \le C_{mz}\left\{1 + 1.4\left(\frac{N_{Ed}}{\chi_z N_{Rk} / \gamma_{M1}}\right)\right\}$$

Table B.1

$$0.6 \times \left\{1 + \left[(2 \times 1.13) - 0.6\right]\left[\frac{590}{(0.47 \times 1614.3)/1}\right]\right\} = 1.37$$

$$0.6 \times \left\{1 + 1.4 \times \left(\frac{590}{(0.47 \times 1614.3)/1}\right)\right\} = 1.25$$

$1.37 > 1.25$

Therefore, $k_{zz} = 1.25$

Factor k_{yz}

Table B.2 refers to the expression given in Table B.1.

For Class 1 and 2 sections.

$k_{yz} = 0.6k_{zz} = 0.6 \times 1.25 = 0.75$

Factor k_{zy}

As $\bar{\lambda}_z > 0.4$

$$k_{zy} = 1 - \left(\frac{0.1\bar{\lambda}_z}{C_{mLT} - 0.25}\right)\left(\frac{N_{Ed}}{\chi_z(N_{Rk}/\gamma_{M1})}\right)$$ Table B.2

$$\geq 1 - \left(\frac{0.1}{C_{mLT} - 0.25}\right)\left(\frac{N_{Ed}}{\chi_z(N_{Rk}/\gamma_{M1})}\right)$$

$$1 - \left\{\left(\frac{0.1 \times 1.13}{0.6 - 0.25}\right) \times \left(\frac{590}{0.47(1614.3/1)}\right)\right\} = 0.75$$

$$1 - \left(\frac{0.1}{0.6 - 0.25}\right) \times \left(\frac{590}{0.47 \times (1614.3/1)}\right) = 0.78$$

$0.78 > 0.75$

Therefore, $k_{zy} = 0.78$

Verification

Verify that:

$$\frac{N_{Ed}}{\chi_y N_{Rk}/\gamma_{M1}} + k_{yy}\frac{M_{y.Ed} + \Delta M_{y.Ed}}{\chi_{LT}(M_{y.Rk}/\gamma_{M1})} + k_{yz}\frac{M_{z.Ed} + \Delta M_{z.Ed}}{M_{z.Rk}/\gamma_{M1}} \leq 1.0$$ Eq (6.61)

And:

$$\frac{N_{Ed}}{\chi_z N_{Rk}/\gamma_{M1}} + k_{zy}\frac{M_{y.Ed} + \Delta M_{y.Ed}}{\chi_{LT}(M_{y.Rk}/\gamma_{M1})} + k_{zz}\frac{M_{z.Ed} + \Delta M_{z.Ed}}{M_{z.Rk}/\gamma_{M1}} \leq 1.0$$ Eq (6.62)

$$\frac{590}{(0.8 \times 1614.3)/1} + 0.73 \times \left(\frac{30}{0.94 \times (136.7/1)}\right) + 0.75 \times \left(\frac{1}{63.5/1}\right) = 0.64$$ Eq (6.61)

$$\frac{590}{(0.47 \times 1614.3)/1} + 0.78 \times \left(\frac{30}{0.94 \times (136.7/1)}\right) + 1.25 \times \left(\frac{1}{63.5/1}\right) = 0.98$$ Eq (6.62)

As, $0.64 < 1.0$ and $0.98 < 1.0$

The buckling resistance of the 203 × 203 × 46 UKC in S275 steel under combined bending and compression is adequate.

11.8 Blue Book Approach

Page references given in Section 11.8 are to P363 unless otherwise stated.

The design resistances may be obtained from SCI publication P363.

Consider a 203 × 203 × 46 UKC in S275 steel

11.8.1 Design value of bending moments and compression force

Design bending moment about the *y-y* axis $M_{y,Ed}$ = 30 kNm
Design bending moment about the *z-z* axis $M_{z,Ed}$ = 1 kNm
Design compression force N_{Ed} = 590 kN

11.8.2 Cross section classification

$N_{pl,Rd}$ = 1610 kN — Page C-166

$$n = \frac{N_{Ed}}{N_{pl,Rd}}$$

Limiting value of n for Class 2 sections is 1.0 — Page C-166

$$n = \frac{590}{1610} = 0.37 < 1.0$$

Therefore, under combined axial compression and bending the section is at least Class 2.

11.8.3 Cross-sectional resistance

For Class 1 or 2 cross sections there are two verifications that may be performed.

Verification 1 (conservative)

Verify that:

$$\frac{N_{Ed}}{N_{pl,Rd}} + \frac{M_{y,Ed}}{M_{c,y,Rd}} + \frac{M_{z,Ed}}{M_{c,z,Rd}} \leq 1.0$$ — 6.2.1(7)

$M_{c,y,Rd}$ = 137 kNm — Page C-78

$M_{c,z,Rd}$ = 63.5 kNm

$$\frac{N_{Ed}}{N_{pl,Rd}} + \frac{M_{y,Ed}}{M_{c,y,Rd}} + \frac{M_{z,Ed}}{M_{c,z,Rd}} = \frac{590}{1610} + \frac{30}{137} + \frac{1}{63.5} = 0.6 < 1.0$$

Therefore this verification is satisfied.

Verification 2 (more exact)

Verify that:

$$\left(\frac{M_{y,Ed}}{M_{N,y,Rd}}\right)^{\alpha} + \left(\frac{M_{z,Ed}}{M_{N,z,Rd}}\right)^{\beta} \leq 1.0$$ — 6.2.9.1(6) Eq (6.41)

From the earlier calculations, — Sheet 5

α = 2 and β = 1.85

n = 0.37

From interpolation between $n = 0.3$ and $n = 0.4$:

$M_{N,y,Rd} = 97.9$ kNm Page C-166

$M_{N,z,Rd} = 61.3$ kNm

$$\left(\frac{M_{y,Ed}}{M_{N,y,Rd}}\right)^{\alpha} + \left(\frac{M_{z,Ed}}{M_{N,z,Rd}}\right)^{\beta} = \left(\frac{30}{97.9}\right)^{2} + \left(\frac{1}{61.3}\right)^{1.85} = 0.09 < 1.0$$

Therefore the cross-sectional resistance is adequate.

11.8.4 Buckling resistance

Buckling resistance under bending and axial compression

When both of the following criteria are satisfied:

- The cross section is Class 1, 2 or 3
- $\gamma_{M1} = \gamma_{M0}$

The buckling verification given in 6.3.3 (Expressions 6.61 & 6.62) of BS EN 1993-1-1 may be simplified to:

$$\frac{N_{Ed}}{N_{b,y,Rd}} + k_{yy}\frac{M_{y.Ed}}{M_{b,Rd}} + k_{yz}\frac{M_{z.Ed}}{M_{c,z,Rd}} \leq 1.0$$

$$\frac{N_{Ed}}{N_{b,z,Rk}} + k_{zy}\frac{M_{y.Ed}}{M_{b,Rk}} + k_{zz}\frac{M_{z.Ed}}{M_{c,z,Rd}} \leq 1.0$$

From Section 11.7, the values of the interaction factors are:

$k_{yy} = 0.73$

$k_{yz} = 0.75$

$k_{zy} = 0.78$

$k_{zz} = 1.25$

For a buckling length of $L = 5$ m and $n = 0.37 < 1.0$ Page C-13

$N_{b,y,Rd} = 1310$ kNm

$N_{b,z,Rd} = 762$ kNm

$M_{c,z,Rd} = 63.5$ kNm Page C-78

From Section 11.7 of this example

$$\frac{1}{\sqrt{C_1}} = 0.75$$ Sheet 9

Therefore,

$$C_1 = \left(\frac{1}{0.75}\right)^{2} = 1.78$$

From interpolation for $C_1 = 1.78$ and $L = 5$ m

$M_{b,Rd} = 135$ kNm Page C-78

Verifications:

$$\left(\frac{590}{1310}\right) + 0.73 \times \left(\frac{30}{135}\right) + 0.75 \times \left(\frac{1}{63.5}\right) = 0.62 < 1.0$$

$$\left(\frac{590}{762}\right) + 0.78 \times \left(\frac{30}{135}\right) + 1.25 \times \left(\frac{1}{63.5}\right) = 0.97 < 1.0$$

Therefore, the buckling resistance is adequate.

Note that in this instance, the 'blue book' approach appears to give less onerous result than the preceding calculations. This is because in the preceding calculations χ_{LT} was conservatively based on a simple 0.9 factor in the calculation of λ_{LT}.

12 Major axis bending and compression of a Class 3 section

References are to BS EN 1993-1-1: 2005, including its National Annex, unless otherwise stated.

12.1 Scope

The beam shown in Figure 12.1 is subject to compression force and a concentrated load at its mid-span. The beam is restrained against lateral movement and torsion by the secondary beam connected at its mid-span, but is otherwise unrestrained. The beam is assumed to be pinned at its ends in both the major and minor axes. Verify the adequacy of a 457 × 191 × 67 UKB in S355 steel.

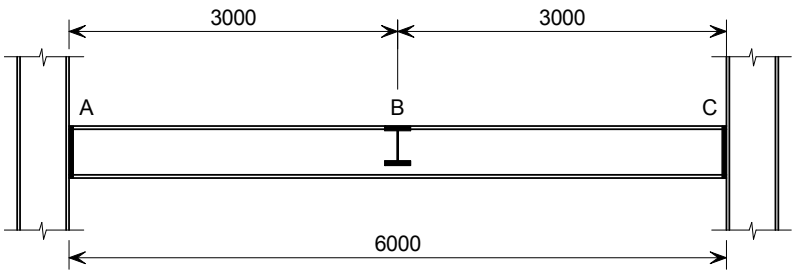

Figure 12.1

The design aspects covered in this example are:

- Cross section classification
- Cross sectional resistance:
  - Shear buckling
  - Shear
  - Moment
- Lateral torsional buckling resistance.

12.2 Design value of combined actions for Ultimate Limit State

Concentrated load $F_{d,1}$ = 92 kN
UDL $F_{d,2}$ = 1.8 kN/m

The action that gives rise to the compression force is not independent of the variable actions included in the concentrated load and UDL, and therefore is present in the same combination of actions.

12.3 Design values of bending moment and forces

Design compression force N_{Ed} = 1100 kN

Maximum design bending moment (mid-span) M_{Ed} = 146.10 kNm

Maximum design shear force (at A and C) V_{Ed} = 51.40 kN

Design shear force at the mid-span (B) $V_{B,Ed}$ = 46.00 kN

The shear force and bending moment diagrams are shown in Figure 12.2.

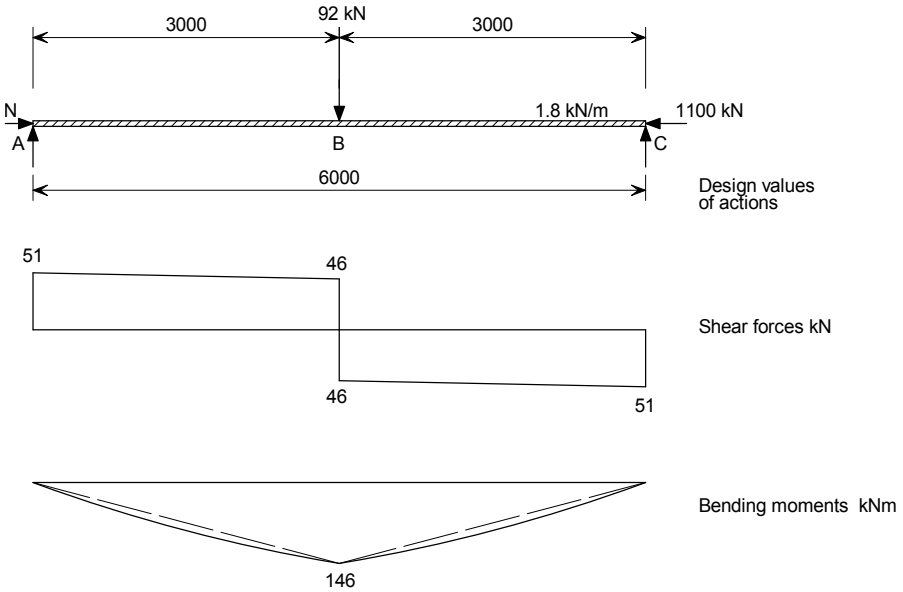

Figure 12.2

12.4 Section properties

For a 457 × 191 × 67 UKB in S355

From section property tables: P363

Depth	h	= 453.4 mm
Width	b	= 189.9 mm
Web thickness	t_w	= 8.5 mm
Flange thickness	t_f	= 12.7 mm
Root radius	r	= 10.2 mm
Depth between fillets	d	= 407.6 mm
Radius of gyration *y-y* axis	i_y	= 18.5 cm
Radius of gyration *z-z* axis	i_z	= 4.12 cm
Plastic modulus *y-y* axis	$W_{pl,y}$	= 1470.0 cm^3
Elastic modulus *y-y* axis	$W_{el,y}$	= 1300.0 cm^3
Elastic modulus *z-z* axis	$W_{el,z}$	= 153.0 cm^3
Area	A	= 85.5 cm^2
Modulus of elasticity	E	= 210 000 N/mm^2
Shear modulus	G	≈ 81 000 N/mm^2

3.2.6(1)

For buildings that will be built in the UK, the nominal values of the yield strength (f_y) and the ultimate strength (f_u) for structural steel should be those obtained from the product standard. Where a range is given, the lowest nominal value should be used. — NA.2.4

For S355 steel and $t \leq 16$ mm
Yield strength, $f_y = R_{eH} = 355$ N/mm^2 — BS EN 10025-2 Table 7

12.4.1 Cross section classification

$$\varepsilon = \sqrt{\frac{235}{f_y}} = \sqrt{\frac{235}{355}} = 0.81$$ — Table 5.2

Outstand of compression flange

$$c = \frac{b - t_w - 2r}{2} = \frac{189.9 - 8.5 - (2 \times 10.2)}{2} = 80.5 \text{ mm}$$ — Table 5.2

$$\frac{c}{t_f} = \frac{80.5}{12.7} = 6.34$$

The limiting value for Class 1 is $\frac{c}{t_f} \leq 9\varepsilon = 9 \times 0.81 = 7.29$

$6.34 < 7.29$

Therefore the flange is Class 1.

Web subject to bending and to compression force $N_{Ed} = 1100$ kN

$c = d = 407.6$ mm — Table 5.2

$$\frac{c}{t_w} = \frac{407.6}{8.5} = 47.95$$

For plastic stress distribution,

$$\alpha = 0.5\left[1 + \left(\frac{N_{Ed}}{f_y t_w d}\right)\right] = 0.5 \times \left[1 + \left(\frac{1100 \times 10^3}{355 \times 8.5 \times 407.6}\right)\right] = 0.95$$ — P362 Table5.1

but $-1 < \alpha \leq 1$

Therefore $\alpha = 0.95$

As $\alpha > 0.5$ the limiting value for Class 2 is:

$$\frac{c}{t_w} \leq \frac{456\varepsilon}{13\alpha - 1} = \frac{456 \times 0.81}{(13 \times 0.95) - 1} = 32.54 < 47.95$$

Therefore the web is not class 1 or 2

For elastic stress distribution,

$$\psi = \frac{2N_{Ed}}{Af_y} - 1 = \left(\frac{2 \times 110 \times 10^3}{8550 \times 355}\right) - 1 = -0.28$$ — P362 Table5.1

As $\psi > -1$

The limiting value for Class 3 is

$$\frac{c}{t_w} \le \frac{42\varepsilon}{0.67 + 0.33\psi} = \frac{42 \times 0.81}{0.67 + \left(0.33 \times (-0.28)\right)} = 58.90$$

$32.54 < 47.95 < 58.90$

Therefore the web is Class 3 under combined bending and N_{Ed} = 1100 kN.

Therefore the cross section is Class 3 under combined bending and N_{Ed} = 1100 kN.

12.5 Partial factors for resistance

$\gamma_{M0} = 1.0$ NA.2.15

$\gamma_{M1} = 1.0$

12.6 Cross-sectional resistance

12.6.1 Shear buckling

The shear buckling resistance for webs should be verified according to Section 5 of BS EN1993-1-5 if: 6.2.6(6)

$$\frac{h_w}{t_w} > 72\frac{\varepsilon}{\eta}$$ Eq (6.23)

$\eta = 1.0$ BS EN 1993-1-5 NA.2.4

$h_w = h - 2t_f = 453.4 - \left(2 \times 12.7\right) = 428.0$ mm

$$\frac{h_w}{t_w} = \frac{428.0}{8.5} = 50.35$$

$$72\frac{\varepsilon}{\eta} = 72 \times \frac{0.81}{1.0} = 58.32$$

$50.35 < 58.32$

Therefore the shear buckling resistance of the web does not need to be verified.

12.6.2 Shear resistance

Verify that: 6.2.6(1)

$$\frac{V_{Ed}}{V_{c,Rd}} \le 1.0$$ Eq (6.17)

$V_{c,Rd}$ is the design plastic shear resistance ($V_{pl,Rd}$).

$$V_{c,Rd} = V_{pl,Rd} = \frac{A_v(f_y/\sqrt{3})}{\gamma_{M0}}$$ 6.2.6(2) Eq (6.18)

A_v is the shear area and is determined as follows for rolled I and H sections with the load applied parallel to the web.

$A_v = A - 2bt_f + t_f(t_w + 2r)$ but not less than $\eta h_w t_w$

$= 85.5 \times 10^2 - (2 \times 189.9 \times 12.7) + 12.7 \times (8.5 + (2 \times 10.2))$

$= 4024 \text{ mm}^2$

$\eta h_w t_w = 1.0 \times 428 \times 8.5 = 3638.00 \text{ mm}^2$

Therefore, $A_v = 4094 \text{ mm}^2$

Therefore the design plastic shear resistance is: 6.2.6(2) Eq (6.18)

$$V_{pl,Rd} = \frac{A_v (f_y/\sqrt{3})}{\gamma_{M0}} = \frac{4094 \times (355/\sqrt{3})}{1.0} \times 10^{-3} = 839 \text{ kN}$$

Maximum design shear $V_{Ed} = 51.4$ kN Sheet 2

$$\frac{V_{Ed}}{V_{c,Rd}} = \frac{51.4}{839} = 0.06 < 1.0$$

Therefore the shear resistance of the section is adequate.

12.6.3 Resistance for combined bending, shear and axial force

Check whether the presence of shear reduces the resistance of the section for bending and compression.

$$\frac{V_{pl,Rd}}{2} = \frac{839.0}{2} = 419.50 \text{ kN}$$

The design shear force at maximum moment is, $V_{B,Ed} = 46.0$ kN

46.0 kN < 419.50 kN

Therefore **no reduction** in resistance for bending and axial force need be made. 6.2.10(2)

For Class 3 cross sections, the maximum longitudinal stress, in the absence of shear, ($\sigma_{x,Ed}$) should satisfy the following: 6.2.9.2(1)

$$\sigma_{x,Ed} \le \frac{f_y}{\gamma_{M0}}$$ Eq (6.42)

The maximum longitudinal design stress ($\sigma_{x,Ed}$) is:

$$\sigma_{x,Ed} = \frac{N_{Ed}}{A} + \frac{M_{Ed}}{W_{el,y}} = \frac{1100 \times 10^3}{8550} + \frac{146 \times 10^6}{1300 \times 10^3} = 241 \text{ N/mm}^2$$

$$\frac{f_y}{\gamma_{M0}} = \frac{355}{1.0} = 355 \text{ N/mm}^2$$

241 N/mm^2 < 355 N/mm^2

Therefore the resistance of the section for combined bending, shear and axial force is adequate.

12.7 Buckling resistance

12.7.1 Buckling length

The beam is pinned at both ends and restrained against lateral movement and torsion at its mid-span. Therefore the buckling lengths may be taken as:

Major axis $L_{cr,y} = 6000$ mm

Minor axis $L_{cr,z} = 3000$ mm

12.7.2 Combined bending and compression

For combined bending about the *y-y* axis and compression, verify that:

$$\frac{N_{Ed}}{\chi_y N_{Rk} / \gamma_{M1}} + k_{yy} \frac{M_{y.Ed} + \Delta M_{y.Ed}}{\chi_{LT}(M_{y,Rk} / \gamma_{M1})} \leq 1.0$$

Based on Eq (6.61)

And

$$\frac{N_{Ed}}{\chi_z N_{Rk} / \gamma_{M1}} + k_{zy} \frac{M_{y.Ed} + \Delta M_{y.Ed}}{\chi_{LT}(M_{y,Rk} / \gamma_{M1})} \leq 1.0$$

Based on Eq (6.62)

where:

χ_y & χ_z are the reduction factors for flexural buckling about the major and minor axes

χ_{LT} is the reduction factor for lateral-torsional buckling

k_{yy} & k_{zy} are the interaction factors

For Class 3 cross sections: Table 6.7

$N_{Rk} = Af_y = 8550 \times 355 \times 10^{-3} = 3035.3$ kN

$M_{y,Rk} = W_{el,y} f_y = 1300 \times 10^3 \times 355 \times 10^{-6} = 461.5$ kNm

$\Delta M_{y,Ed} = 0.0$ kNm

Reduction factor for flexural buckling

The flexural reduction factor is determined from:

$$\chi = \frac{1}{\left(\Phi + \sqrt{\left(\Phi^2 - \bar{\lambda}^2\right)}\right)} \leq 1.0$$

Eq (6.49)

where

$$\Phi = 0.5 + \left(1 + \alpha\left(\bar{\lambda} - 0.2\right) + \bar{\lambda}^2\right)$$

$\bar{\lambda}$ is the non-dimensional slenderness for flexural buckling

$$\bar{\lambda} = \sqrt{\frac{Af_y}{N_{cr}}} = \left(\frac{L_{cr}}{i}\right)\left(\frac{1}{\lambda_1}\right)$$ (For Class 1, 2 and 3 cross sections)

6.3.1.3(1) Eq (6.50)

$\lambda_1 = 93.9\varepsilon = 93.9 \times 0.81 = 76.06$

Buckling about the minor axis (z-z)

$$\overline{\lambda_z} = \left(\frac{L_{cr,z}}{i_z}\right)\left(\frac{1}{\lambda_1}\right) = \left(\frac{3000}{41.2}\right)\times\left(\frac{1}{76.06}\right) = 0.96$$ Eq (6.50)

The appropriate buckling curve depends on h/b:

$$\frac{h}{b} = \frac{453.4}{189.9} = 2.39 > 1.2,\ t_f = 12.7 \text{ mm} < 40 \text{ mm}$$ Table 6.2

Therefore, for S355, the buckling curve to consider for the z-z axis is 'b'

For buckling curve 'b' $\alpha_z = 0.34$ Table 6.1

$$\Phi_z = 0.5\left[1 + \alpha\left(\bar{\lambda}_z - 0.2\right) + \bar{\lambda}_z^2\right]$$ 6.3.1.2(1)

$$= 0.5 \times \left[1 + 0.34 \times \left(0.96 - 0.2\right) + 0.96^2\right] = 1.09$$

$$\chi_z = \frac{1}{(\Phi_z + \sqrt{(\Phi_z^2 - \bar{\lambda}_z^2)}} = \frac{1}{1.09 + \sqrt{(1.09^2 - 0.96^2)}} = 0.62$$ Eq (6.49)

$0.62 < 1.0$

Therefore,

$\chi_z = 0.62$

Buckling about the major axis (y-y)

$$\overline{\lambda_y} = \left(\frac{L_{cr,y}}{i_y}\right)\left(\frac{1}{\lambda_1}\right) = \left(\frac{6000}{185}\right)\times\left(\frac{1}{76.06}\right) = 0.43$$ Eq (6.50)

The appropriate buckling curve depends on h/b:

$$\frac{h}{b} = \frac{453.4}{189.9} = 2.39 > 1.2,\ t_f = 12.7 \text{ mm} < 40 \text{ mm}$$ Table 6.2

Therefore, for S355, the buckling curve to consider for the y-y axis is 'a'

For buckling curve 'a' $\alpha_y = 0.21$ Table 6.1

$$\Phi_y = 0.5\left[1 + \alpha_y\left(\bar{\lambda}_y - 0.2\right) + \bar{\lambda}_y^2\right]$$ 6.3.1.2(1)

$$= 0.5 \times \left[1 + 0.21 \times \left(0.43 - 0.2\right) + 0.43^2\right] = 0.62$$

$$\chi_y = \frac{1}{(\Phi_y + \sqrt{(\Phi_y^2 - \bar{\lambda}_y^2)}} = \frac{1}{0.62 + \sqrt{(0.62^2 - 0.43^2)}} = 0.94$$ Eq (6.49)

$0.94 < 1.0$

Therefore,

$\chi_y = 0.94$

Reduction factor for lateral torsional buckling

As a UKB is being considered, the method given in 6.3.2.3 for determining the reduction factor for lateral-torsional buckling (χ_{LT}) for rolled sections is used.

$$\chi_{LT} \frac{1}{\Phi_{LT} + \sqrt{\Phi_{LT}^2 - \beta \bar{\lambda}_{LT}^2}} \text{ but } \leq 1.0 \text{ and } \leq \frac{1}{\bar{\lambda}_{LT}^2}$$

6.3.2.3(1) Eq (6.57)

where:

$$\Phi_{LT} = 0.5\left[1 + \alpha_{LT}\left(\bar{\lambda}_{LT} - \bar{\lambda}_{LT,0}\right) + \beta \bar{\lambda}_{LT}^2\right]$$

From the UK National Annex, $\bar{\lambda}_{LT,0} = 0.4$ and $\beta = 0.75$ — NA.2.17

The appropriate buckling curve depends on h/b: — NA.2.17

$$\frac{h}{b} = \frac{453.4}{189.9} = 2.39$$

As $2 < 2.39 < 3.1$ use buckling curve 'c'

For buckling curve 'c' $\alpha_{LT} = 0.49$ — NA.2.16 & Table 6.3

$$\bar{\lambda}_{LT} = \sqrt{\frac{W_y f_y}{M_{cr}}}$$

BS EN1993-1-1 does not give a method for determining the elastic critical moment for lateral-torsional buckling (M_{cr}). The approach given in SCI publication P362 is used to determine $\bar{\lambda}_{LT}$.

It should be noted that the approach for determining $\bar{\lambda}_{LT}$ given in P362 is conservative, other approaches that may be used are:

- Determine M_{cr} from either;
  - Hand calculations
  - Software programmes e.g. '*LTBeam*'
- Determine $\bar{\lambda}_{LT}$ using the more exact method, see Example 4.

Using the P362method:

Consider the span between lateral restraints.

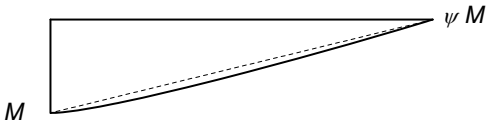

$$\bar{\lambda}_{LT} = \frac{1}{\sqrt{C_1}} 0.9 \bar{\lambda}_z \sqrt{\beta_w}$$

P362 5.6.2.1(5)

Based on the bending moment diagram, $\psi = 0$, therefore,

$$\frac{1}{\sqrt{C_1}} = 0.75$$

P362 Table 5.5

$\bar{\lambda}_z = 0.96$ — Sheet 4

For Class 3 cross sections

$$\beta_w = \frac{W_{el,y}}{W_{pl,y}} = \frac{1300}{1470} = 0.88$$

$$\bar{\lambda}_{LT} = 0.75 \times 0.9 \times 0.96 \times \sqrt{0.88} = 0.61$$

$$\Phi_{LT} = 0.5\left[1 + 0.49 \times (0.61 - 0.4) + \left(0.75 \times 0.61^2\right)\right] = 0.69$$ 6.3.2.3(1)

$$\chi_{LT} = \frac{1}{0.69 + \sqrt{0.69^2 - \left(0.75 \times 0.61^2\right)}} = 0.88$$ Eq (6.57)

$$\frac{1}{\bar{\lambda}_{LT}^2} = \frac{1}{0.61^2} = 2.69$$

$0.88 < 1.0 < 2.69$

Therefore,

$\chi_{LT} = 0.88$

To account for the moment distribution, χ_{LT} may be modified as follows: 6.3.2.3(2)

$$\chi_{LT,mod} = \frac{\chi_{LT}}{f} \text{ but } \chi_{LT,mod} \le 1.0$$ Eq (6.58)

$$F = 1 - 0.5(1 - k_c)\left[1 - 2\left(\bar{\lambda}_{LT} - 0.8\right)^2\right] \text{ but } f \le 1.0$$ 6.3.2.3(2)

$$k_c = \frac{1}{\sqrt{C_1}}$$ NA.2.18

$$\frac{1}{\sqrt{C_1}} = 0.75$$ Sheet 8

$$f = 1 - 0.5 \times (1 - 0.75) \times \left[1 - 2 \times (0.69 - 0.8)^2\right] = 0.88$$ 6.3.2.3(2)

Therefore,

$$\chi_{LT,mod} = \frac{0.88}{0.88} = 1.0$$ Eq (6.58)

Interaction factors (C_{my} and C_{mLT})

Factor C_{my}

C_{my} is determined from the bending moment diagram along the whole span of the beam. Table B.3

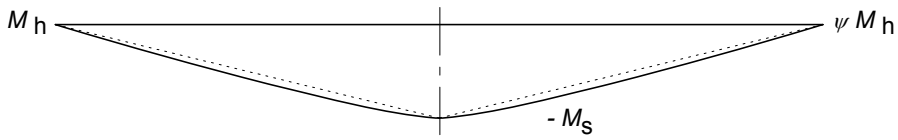

Therefore for C_{my}

M_h = 0 kNm

M_s = 146 kNm

As $M_h < M_s$

$$\alpha_h = \frac{M_h}{M_s} = \frac{0}{146} = 0 \text{ and } \psi = 1.0$$

Therefore, as the moment is predominantly due to the concentrated load,

$$C_{my} = 0.9 + 0.1\alpha_h$$

$$C_{my} = 0.9 + (0.1 \times 0) = 0.9$$

Factor C_{mLT}

C_{mLT} is determined from the bending moment diagram between the end of the beam and the location of the secondary beam, as this beam restrains the primary beam against lateral torsional buckling at this point.

Table B.3.

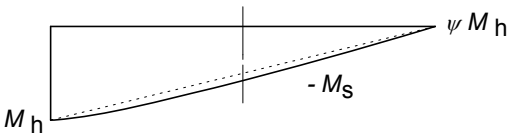

Therefore for C_{mLT}

M_h = 146 kNm

M_s = 79 kNm

ψ = 0

As $M_h > M_s$

$$\alpha_s = \frac{M_s}{M_h} = \frac{79}{146} = 0.54$$

Therefore, as the moment is predominantly due to the concentrated load,

$$C_{mLT} = 0.2 + 0.8\alpha_s \geq 0.4$$

$$C_{mLT} = 0.2 + (0.8 \times 0.54) = 0.63 > 0.4$$

Therefore,

$$C_{mLT} = 0.63$$

For members susceptible to torsional deformations, the expressions given in Table B.2 should be used to calculate the interaction factors.

k_{yy}

Table B.2 refers to the expression given in Table B.1.

For Class 3 and 4 sections.

$$k_{yy} = C_{my}\left\{1 + 0.6\bar{\lambda}_y\left(\frac{N_{Ed}}{\chi_y N_{Rk}/\gamma_{M1}}\right)\right\} \leq C_{my}\left\{1 + 0.6\left(\frac{N_{Ed}}{\chi_y N_{Rk}/\gamma_{M1}}\right)\right\}$$

Table B.1

$$0.9 \times \left\{1 + (0.6 \times 0.43) \times \left(\frac{1100}{(0.94 \times 3035.3/1.0)}\right)\right\} = 0.99$$

$$0.9 \times \left\{ 1 + 0.6 \times \left(\frac{1100}{\left(0.94 \times 3035.3/1.0\right)} \right) \right\} = 1.11$$

$0.99 < 1.11$

Therefore,

$k_{yy} = 0.99$

k_{zy}

For Class 3 and 4 sections.

$$k_{zy} = 1 - \left\{ \left(\frac{0.05\bar{\lambda}_z}{C_{mLT} - 0.25} \right) \left(\frac{N_{Ed}}{\chi_z \left(N_{Rk} / \gamma_{M1} \right)} \right) \right\}$$ Table B.2

$$\geq 1 - \left\{ \left(\frac{0.05}{C_{mLT} - 0.25} \right) \left(\frac{N_{Ed}}{\chi_z \left(N_{Rk} / \gamma_{M1} \right)} \right) \right\}$$

$$1 - \left\{ \left(\frac{0.05 \times 0.96}{0.63 - 0.25} \right) \left(\frac{1100}{\left(0.62 \times 3035.3/1.0\right)} \right) \right\} = 0.93$$

$$1 - \left\{ \left(\frac{0.05}{0.63 - 0.25} \right) \times \left(\frac{1100}{\left(0.62 \times 3035.3/1.0\right)} \right) \right\} = 0.92$$

$0.93 > 0.92$

Therefore,

$k_{zy} = 0.93$

Verification

$$\frac{N_{Ed}}{\chi_y N_{Rk} / \gamma_{M1}} + k_{yy} \frac{M_{y.Ed} + \Delta M_{y,Ed}}{\chi_{LT}(M_{y.Rk} / \gamma_{M1})} \leq 1.0$$ Based on Eq (6.61)

And

$$\frac{N_{Ed}}{\chi_z N_{Rk} / \gamma_{M1}} + k_{zy} \frac{M_{y.Ed} + \Delta M_{y,Ed}}{\chi_{LT}(M_{y.Rk} / \gamma_{M1})} \leq 1.0$$ Based on Eq (6.62)

$M_{y,Ed} = M_{Ed} = 146$ kNm Sheet 2

$$\frac{1100}{\left(0.94 \times 3035.3/1.0\right)} + 0.99 \times \left(\frac{146}{\left(1.0 \times 461.5/1.0\right)} \right) = 0.70 < 1.0$$ Based on Eq (6.61)

$$\frac{1100}{\left(0.62 \times 3035.3/1.0\right)} + 0.92 \times \left(\frac{146}{\left(1.0 \times 461.5/1.0\right)} \right) = 0.88 < 1.0$$ Based on Eq (6.62)

$0.70 < 1.0$ and $0.88 < 1.0$

Therefore, the bending and compression buckling resistance is adequate.

12.8 Blue Book Approach

Page references given in Section 12.8 are to P363 unless otherwise stated.

The design resistances may be obtained from SCI publication P363.

Consider the 457 × 191 × 67 UKB in S355 steel

12.8.1 Design value of moments and forces

Design compression force N_{Ed} = 1100 kN

Maximum design bending moment (mid-span) M_{Ed} = 146.10 kNm

Maximum design shear force V_{Ed} = 51.40 kN

Design shear force at the mid-span (B) $V_{B,Ed}$ = 46.00 kN

12.8.2 Cross section classification

$N_{pl,Rd}$ = 3040 kN — Page D-144

$$n = \frac{N_{Ed}}{N_{pl,Rd}}$$

Limiting value of n for Class 2 sections is 0.139 — Page D-144

Limiting value of n for Class 3 sections is 0.569

$$n = \frac{1100}{3040} = 0.36$$

$0.139 < 0.36 < 0.569$

Therefore, under combined bending and compression force N_{Ed} = 1100 kN the section is Class 3.

12.8.3 Cross -sectional resistance

Shear resistance

$V_{c,Rd}$ = 839 kN — PageD-104

$$\frac{V_{Ed}}{V_{c,Rd}} = \frac{51.4}{839} = 0.06 < 1.0$$

Therefore the shear resistance is adequate

Combined bending, shear and compression resistance

$$\frac{V_{pl,Rd}}{2} = \frac{839}{2} = 419.5 \text{ kN}$$

As $V_{B,Ed}$ = 46.0 kN < 419.5 kN the effect of shear on the resistance of the section to combined bending and compression does not need to be accounted for, thus the requirement is simply to verify that:

$$\frac{N_{Ed}}{N_{pl,Rd}} + \frac{M_{y,Ed}}{M_{c,y,Rd}} \leq 1.0$$ — Section 10.2.1

$M_{c,y,Rd}$ = 522 kNm — Page D-67

$$\frac{N_{Ed}}{N_{pl,Rd}} + \frac{M_{y,Ed}}{M_{c,y,Rd}} = \frac{1100}{3040} + \frac{146}{522} = 0.64 < 1.0$$

Therefore the resistance of the cross section to combined bending, shear and compression is adequate.

12.8.4 Buckling resistance to combined bending and compression

When both of the following criteria are satisfied:

- The cross section is Class 1, 2 or 3
- $\gamma_{M1} = \gamma_{M0}$

The buckling verification given in 6.3.3 (Expressions 6.61 & 6.62) of BS EN 1993-1-1 may be simplified to:

$$\frac{N_{Ed}}{N_{b,y,Rd}} + k_{yy}\frac{M_{y.Ed}}{M_{b,Rd}} \leq 1.0 \qquad \text{(no minor axis moment)}$$

$$\frac{N_{Ed}}{N_{b,z,Rk}} + k_{zy}\frac{M_{y.Ed}}{M_{b,Rk}} \leq 1.0 \qquad \text{(no minor axis moment)}$$

From earlier calculations — Sheet 11

$k_{yy} = 0.99$ — Sheet 11

$k_{zy} = 0.93$

Compression buckling resistance *y-y* axis — Page D-145

For a buckling length of $L = 6$ m and $n = 0.36 < 0.569$

$N_{b,y,Rd} = 2870$ kNm

Compression buckling resistance *z-z* axis — Page D-145

For a buckling length of $L = 3$ m and $n = 0.36 < 0.569$

$N_{b,z,Rd} = 1900$ kNm

Lateral torsional buckling resistance

From Section 12.6 of this example

$$\frac{1}{\sqrt{C_1}} = 0.75$$ — Sheet 8

Therefore,

$$C_1 = \left(\frac{1}{0.75}\right)^2 = 1.78$$

For $C_1 = 1.78$ and $L = 3$ m

$M_{b,Rd} = 507$ kNm — D-67

Verification

Resistance under combined bending and compression

$$\left(\frac{1100}{2870}\right) + 0.99 \times \left(\frac{146}{507}\right) = 0.67 < 1.0$$

$$\left(\frac{1100}{1900}\right) + 0.93 \times \left(\frac{146}{507}\right) = 0.85 < 1.0$$

Therefore, the buckling resistance is adequate.

Note: The Blue book approach gives better utilization values than those on Sheet 11 (0.70 and 0.88), due to the conservative method used to determine χ_{LT} in Section 12.7.2 of this example.

13 Column in simple construction

References are to BS EN 1993-1-1: 2005, including its National Annex, unless otherwise stated.

13.1 Scope

Design the column shown in Figure 13.1 in S275 steel between levels 1 and 2. The following assumptions may be made:

- The column is continuous and forms part of a structure of simple construction.
- The column is nominally pinned at the base.
- Beams are connected to the column flange by flexible end plates.

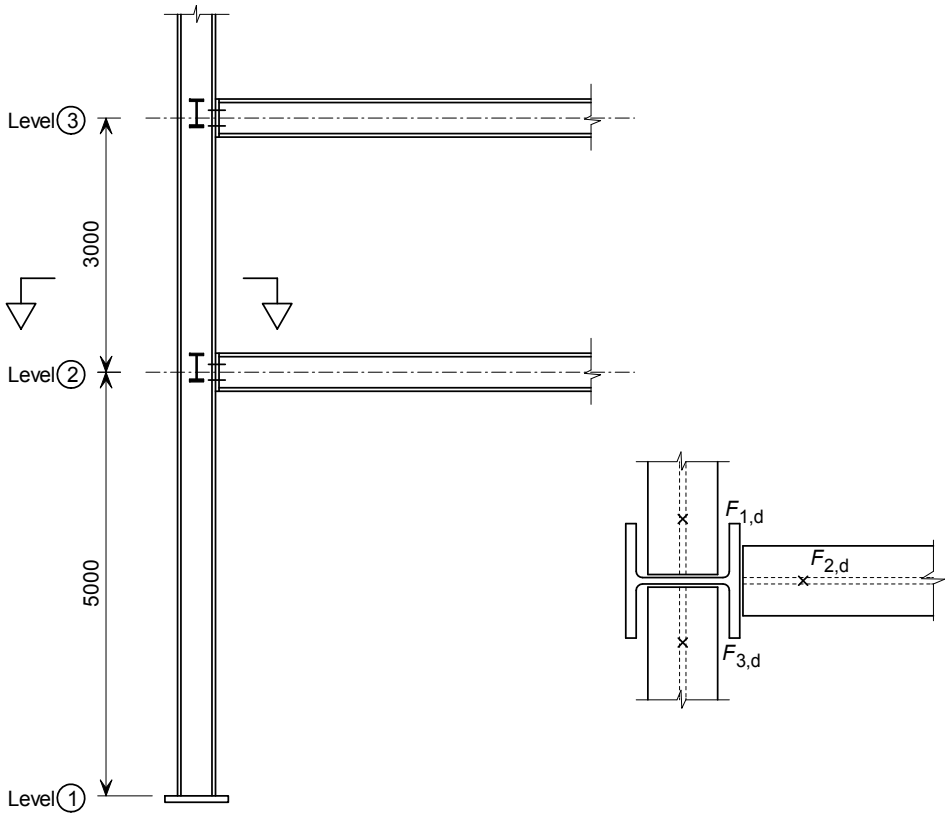

Figure 13.1

The design aspects covered in this example are:

- Cross section classification
- Simplified interaction criteria for combined axial compression and bi-axial bending as given in the Access Steel document SN048.

13.2 Design values of combined actions at ultimate limit state

Reaction from beam 1 $F_{1,d}$ = 37 kN
Reaction from beam 2 $F_{2,d}$ = 147 kN
Reaction from beam 3 $F_{3,d}$ = 28 kN

Design compression in column between levels 2 and 3
$N_{2\text{-}3,Ed}$ = 377 kN

13.2.1 Design compression force in column1-2

The total compression force in the column between levels 1 and 2 is:

$$N_{Ed} = N_{2\text{-}3,Ed} + F_{1,d} + F_{2,d} + F_{3,d} = 377 + 37 + 147 + 28 = 589 \text{ kN}$$

13.2.2 Design bending moments in column 1-2 due to eccentricities

For columns in simple construction, the beam reactions are assumed to act at a distance of 100 mm from the face of the column.

Access-steel document SN005

For a 203 × 203 × 46 UKC.

The bending moments at level 2 are:

$$M_{2,y,Ed} = F_{2,d}\left(\frac{h}{2} + 100\right) = 147 \times \left(\frac{203.2}{2} + 100\right) \times 10^{-3} = 29.64 \text{ kNm}$$

$$M_{2,z,Ed} = \left(F_{1,d} - F_{3,d}\right)\left(\frac{t_w}{2} + 100\right) = (37 - 28) \times \left(\frac{7.2}{2} + 100\right) \times 10^{-3}$$

$$= 0.93 \text{ kNm}$$

These bending moments are distributed between the column lengths above and below level 2 in proportion to their bending stiffness. Therefore the design bending moments acting on the column length between levels 1 and 2 are:

y-y axis $M_{y,Ed} = 29.64 \times \frac{3}{8} = 11.11$ kNm

z-z axis $M_{z,Ed} = 0.93 \times \frac{3}{8} = 0.35$ kNm

There are no moments at level 1.

13.3 Section properties

For a 203 × 203 × 46 UKC in S275 steel

From section property tables: P363

Depth	h	= 203.2 mm
Width	b	= 203.6 mm
Web thickness	t_w	= 7.2 mm
Flange thickness	t_f	= 11.0 mm
Root radius	r	= 10.2 mm
Depth between fillets	d	= 160.8 mm
Second moment of area z-z axis	I_z	= 1 550 cm^4
Radius of gyration y-y axis	i_y	= 8.82 cm
Radius of gyration z-z axis	i_z	= 5.13 cm
Plastic modulus y-y axis	$W_{pl,y}$	= 497 cm^3
Plastic modulus z-z axis	$W_{pl,z}$	= 231 cm^3
Warping constant	I_w	= 0.143 dm^6
St Venant torsional constant	I_T	= 22.2 cm^4
Area	A	= 58.7 cm^2

Modulus of elasticity E = 210 000 N/mm^2 — 3.2.6(1)

Shear modulus $G \approx$ 81000 N/mm^2

For buildings that will be built in the UK, the nominal values of the yield strength (f_y) and the ultimate strength (f_u) for structural steel should be those obtained from the product standard. Where a range is given, the lowest nominal value should be used. — NA.2.4

For S275 steel and $t \leq 16$ mm — BS EN 10025-2 Table 7

Yield strength $f_y = R_{eH}$ = 275 N/mm^2

13.4 Partial factors for resistance

γ_{M0} = 1.0 — NA.2.15

γ_{M1} = 1.0

13.5 Cross section classification

$$\varepsilon = \sqrt{\frac{235}{f_y}} = \sqrt{\frac{235}{275}} = 0.92$$ — Table 5.2

Outstand of compression flange

$$c = \frac{b - t_w - 2r}{2} = \frac{203.6 - 7.2 - (2 \times 10.2)}{2} = 88.0 \text{ mm}$$

$$\frac{c}{t_f} = \frac{88}{11} = 8.0$$ — Table 5.2

The limiting value for Class 1 is $\frac{c}{t_f} \leq 9\varepsilon = 9 \times 0.92 = 8.28$

8.0 < 8.28

Therefore the flange in compression is Class 1

Web subject to bending and compression

Table 5.2

$c = d = 160.8$ mm

$\frac{c}{t_w} = \frac{160.8}{7.2} = 22.3$

For plastic stress distributions,

P362 Table5.1

$$\alpha = 0.5\left[1+\left(\frac{N_{Ed}}{f_y t_w d}\right)\right] = 0.5 \times \left[1+\left(\frac{589 \times 10^3}{275 \times 7.2 \times 160.8}\right)\right] = 1.4$$

but $-1 < \alpha \leq 1$

Therefore $\alpha = 1.0$

As $\alpha > 0.5$ the limiting value for Class 1 is

$$\frac{c}{t_w} \leq \frac{396\varepsilon}{13\alpha - 1} = \frac{396 \times 0.92}{(13 \times 1) - 1} = 30.4$$

22.3 < 30.4

Therefore the web is Class 1 under bending and $N_{Ed} = 589$ kN

Therefore the cross-section is Class 1 under bending and $N_{Ed} = 589$ kN.

13.6 Simplified interaction criterion

6.3.3(4) of BS EN 1993-1-1 gives two expressions that should be satisfied for members with combined bending and compression (see Example 11).

However, for columns in simple construction, the two expressions may be replaced by a single expression $\frac{N_{Ed}}{N_{min,b,Rd}} + \frac{M_{y,Ed}}{M_{y,b,Rd}} + 1.5\frac{M_{z,Ed}}{M_{z,cb,Rd}} \leq 1.0$ when the following criteria are satisfied:

Access-steel document SN048

- The column is a hot rolled I or H section, or an RHS
- The cross section is class 1, 2 or 3 under compression
- The bending moment diagrams about each axis are linear
- The column is restrained laterally in both the *y-y* and *z-z* directions at each floor level, but is unrestrained between the floors
- The bending moment ratios (ψ_i) as defined in Table B.3 in BS EN 1993-1-1 are less than the values given in Tables 2.1 or 2.2 in the Access-steel document SN048.
  Or
  In the case where a column base is nominally pinned (i.e. $\psi_y = 0$ and $\psi_z = 0$) the axial force ratio must satisfy the following criterion:

$$\frac{N_{Ed}}{N_{y,b,Rd}} \leq 0.83 \text{ (note to Table 2.1)}$$

Here the

- The section is Class 1
- The bending moment ratios are $\psi_y = 0$ and $\psi_z = 0$, as the base of the column is nominally pinned (see Figure 13.2). Therefore determine the axial force ratio.

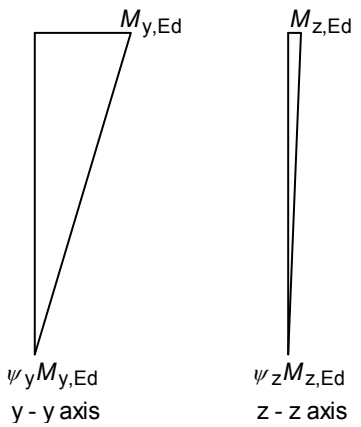

Figure 13.2

Axial force ratio

$$N_{y,b,Rd} = \frac{\chi_y A f_y}{\gamma_{M1}}$$

Determine the flexural buckling reduction factor χ_y :

$$\chi = \frac{1}{(\Phi + \sqrt{(\Phi^2 - \bar{\lambda}^2)}} \leq 1.0$$ Eq (6.49)

Where:

$$\Phi = 0.5 + \left[1 + \alpha\left(\bar{\lambda} - 0.2\right) + \bar{\lambda}^2\right]$$

$$\bar{\lambda} = \sqrt{\frac{A f_y}{N_{cr}}} = \frac{L_{cr}}{i} \times \frac{1}{\lambda_1}$$ 6.3.1.3 Eq (6.50)

$$\lambda_1 = 93.9\varepsilon = 93.9 \times 0.92 = 86.39$$

The buckling length may be taken as:

About the major (y- y) axis $L_{cr} = L = 5000$ mm

$$\bar{\lambda}_y = \left(\frac{L_{cr}}{i_y}\right)\left(\frac{1}{\lambda_1}\right) = \left(\frac{5000}{88.2}\right) \times \left(\frac{1}{86.39}\right) = 0.66$$ Eq (6.50)

The appropriate buckling curve depends on h/b:

$$\frac{h}{b} = \frac{203.2}{203.6} = 1.0 < 1.2,\ t_f = 11.0 \text{ mm} < 100 \text{ mm}$$ Table 6.2

Therefore, for S275, the buckling curve to consider for the major (*y*-y) axis is '*b*'

For buckling curve '*b*' $\alpha_y = 0.34$ — Table 6.1

$$\Phi_y = 0.5\left[1+\alpha\left(\bar{\lambda}_y - 0.2\right)+\bar{\lambda}_y^{\,2}\right]$$ — 6.3.1.2(1)

$$= 0.5\times\left[1+0.34\times\left(0.66-0.2\right)+0.66^2\right] = 0.80$$

$$\chi_y = \frac{1}{(\Phi_y + \sqrt{(\Phi_y^{\,2} - \bar{\lambda}_y^{\,2})}} = \frac{1}{0.8+\sqrt{(0.8^2 - 0.66^2)}} = 0.80$$ — Eq (6.49)

$0.80 < 1.0$

Therefore,

$\chi_y = 0.80$

$$N_{y,b,Rd} = \frac{\chi_y A f_y}{\gamma_{M1}} = \frac{0.8\times 5870\times 275}{1.0}\times 10^{-3} = 1291 \text{ kN}$$ — Eq (6.47)

$$\frac{N_{Ed}}{N_{y,b,Rd}} = \frac{589}{1291} = 0.46$$

$0.46 < 0.83$

Therefore all the criteria given above are met, so the simplified expression may be used for this example.

The criterion to verify is: — Access-steel document SN048

$$\frac{N_{Ed}}{N_{min,b,Rd}} + \frac{M_{y,Ed}}{M_{y,b,Rd}} + 1.5\frac{M_{z,Ed}}{M_{z,cb,Rd}} \le 1.0$$

where:

$N_{min,b,Rd}$ is the lesser of $\frac{\chi_y A f_y}{\gamma_{M1}}$ and $\frac{\chi_z A f_y}{\gamma_{M1}}$.

$$M_{y,b,Rd} = \chi_{LT}\frac{f_y W_{pl,y}}{\gamma_{M1}}$$

$$M_{z,cb,Rd} = \frac{f_y W_{pl,z}}{\gamma_{M1}}$$

Determine $N_{min,b,Rd}$

$N_{y,b,Rd} = 1291$ kN — Sheet 6

Determine $N_{z,b,Rd}$

The buckling length may be taken as:

About the major (*z*-*z*) axis $L_{cr} = L = 5000$ mm

$$\bar{\lambda}_z = \left(\frac{L_{cr}}{i_z}\right)\left(\frac{1}{\lambda_1}\right) = \left(\frac{5000}{51.3}\right)\times\left(\frac{1}{86.39}\right) = 1.13$$ — Eq (6.50)

The appropriate buckling curve depends on h/b:

$$\frac{h}{b} = \frac{203.2}{203.6} = 1.0 < 1.2,\ t_f = 11.0 \text{ mm} < 100 \text{ mm}$$ Table 6.2

Therefore, for S275, the buckling curve to consider for the minor (z-z) axis is 'c'

For buckling curve 'c' $\alpha_z = 0.49$ Table 6.1

$$\Phi_z = 0.5\left[1 + \alpha\left(\bar{\lambda}_z - 0.2\right) + \bar{\lambda}_z^2\right]$$ 6.3.1.2(1)

$$= 0.5 \times \left[1 + 0.49 \times \left(1.13 - 0.2\right) + 1.13^2\right] = 1.37$$

$$\chi_z = \frac{1}{(\Phi_z + \sqrt{(\Phi_z^2 - \bar{\lambda}_z^2)}} = \frac{1}{1.37 + \sqrt{(1.37^2 - 1.13^2)}} = 0.47$$ Eq (6.49)

$0.47 < 1.0$

Therefore,

$\chi_z = 0.47$

$$N_{z,b,Rd} = \frac{\chi_z A f_y}{\gamma_{M1}} = \frac{0.47 \times 5870 \times 275}{1.0} \times 10^{-3} = 759 \text{ kN}$$ Eq (6.47)

759 kN < 1291 kN

Therefore,

$N_{min,b,Rd} = 759$ kN

Determine $M_{y,b,Rd}$

As a UKC is being considered, the method given in 6.3.2.3 for determining the reduction factor for lateral-torsional buckling (χ_{LT}) of rolled sections is used.

$$\chi_{LT} \frac{1}{\Phi_{LT} + \sqrt{\Phi_{LT}^2 - \beta \bar{\lambda}_{LT}^2}} \text{ but } \leq 1.0 \text{ and } \leq \frac{1}{\bar{\lambda}_{LT}^2}$$ BS EN 1993-1-1 6.3.2.3(1) Eq (6.57)

where:

$$\Phi_{LT} = 0.5\left[1 + \alpha_{LT}\left(\bar{\lambda}_{LT} - \bar{\lambda}_{LT,0}\right) + \beta \bar{\lambda}_{LT}^2\right]$$

From the UK National Annex $\bar{\lambda}_{LT,0} = 0.4$ and $\beta = 0.75$ NA.2.17

The appropriate buckling curve depends on h/b: NA.2.17

$$\frac{h}{b} = \frac{203.2}{203.6} = 1.0 < 2$$

Therefore the buckling curve to consider is 'b'

For curve buckling 'b' $\alpha_{LT} = 0.34$ NA2.16 & Table 6.3

$$\bar{\lambda}_{LT} = \sqrt{\frac{W_y f_y}{M_{cr}}}$$ BS EN 1993-1-1 6.3.2.2(1)

where:

W_y = $W_{pl,y}$ for Class 1 or 2 sections

M_{cr} is the elastic critical buckling moment.

For doubly symmetrical sections with 'normal support' conditions at the ends of the member and a linear bending moment diagram M_{cr} may be determined from:

$$M_{cr} = C_1 \frac{\pi^2 EI_z}{L^2} \sqrt{\frac{I_w}{I_z} + \frac{L^2 GI_T}{\pi^2 EI_z}}$$

Access-steel document SN003

where:

L is the element length between points of lateral restraint

= 5000 mm

C_1 is a coefficient depending on the section properties, support conditions and the shape of the bending moment diagram.

For the bending moment diagram shown in Figure 13.2,
C_1 = 1.77

Access-steel SN003 Table 3.1

Therefore,

$$M_{cr} = \left\{1.77\left(\frac{\pi^2 \times 210 \times 10^3 \times 1550 \times 10^4}{5000^2}\right) \times \sqrt{\frac{1.43 \times 10^{11}}{1550 \times 10^4} + \frac{5000^2 \times 81 \times 10^3 \times 22.2 \times 10^4}{\pi^2 \times 210 \times 10^3 \times 1550 \times 10^4}}\right\} \times 10^{-6} = 345.7 \text{ kNm}$$

And

$$\bar{\lambda}_{LT} = \sqrt{\frac{497 \times 10^3 \times 275}{345.7 \times 10^6}} = 0.63$$

$$\Phi_{LT} = 0.5 \times \left[1 + 0.34 \times (0.63 - 0.4) + (0.75 \times 0.63^2)\right] = 0.69$$

BS EN 1993-1-1 6.3.2.3(1)

$$\chi_{LT} = \frac{1}{0.69 + \sqrt{0.69^2 - (0.75 \times 0.63^2)}} = 0.90$$

BS EN 1993-1-1 Eq (6.57)

$$\frac{1}{\bar{\lambda}_{LT}^2} = \frac{1}{0.63^2} = 2.52$$

$0.90 < 1.0 < 2.52$

Therefore

χ_{LT} = 0.90

To account for the bending moment distribution, χ_{LT} may be modified as follows:

$$\chi_{LT,mod} = \frac{\chi_{LT}}{f} \text{ but } \chi_{LT,mod} \leq 1.0$$

$$f = 1 - 0.5\left(1 - k_c\right)\left[1 - 2\left(\bar{\lambda}_{LT} - 0.8\right)^2\right] \text{ but } f \le 1.0$$

BS EN 1993-1-1 6.3.2.3(2)

$$k_c = \frac{1}{\sqrt{C_1}}$$

NA.2.18

For the bending moment diagram given in Figure 13.2

$\psi = 0.0$

Access Steel document SN002 Table 2.1

Therefore

$$\frac{1}{\sqrt{C_1}} = 0.75$$

Thus, $k_c = 0.75$

$$f = 1 - 0.5 \times \left(1 - 0.75\right) \times \left[1 - 2 \times \left(0.63 - 0.8\right)^2\right] = 0.88$$

Therefore,

BS EN 1993-1-1 Eq (6.58)

$$\chi_{LT,mod} = \frac{0.90}{0.88} = 1.02$$

As

$1.02 > 1.0$

$\chi_{LT,mod} = 1.0$

$$M_{y,b,Rd} = \frac{\chi_{LT} W_{pl,y} f_y}{\gamma_{M0}}$$

Access-steel document SN048

where, $\chi_{LT} = \chi_{LT,mod}$

Therefore,

$$M_{y,b,Rd} = 1.0 \times \frac{497 \times 10^3 \times 275}{1.0} \times 10^{-6} = 137 \text{ kNm}$$

Determine $M_{z,cb,Rd}$

$$M_{z,cb,Rd} = \frac{W_{pl,z} f_y}{\gamma_{M1}} = \frac{231 \times 10^3 \times 275}{1.0} \times 10^{-6} = 64 \text{ kNm}$$

Access-steel document SN048

Verification

$$\frac{N_{Ed}}{N_{min,b,Rd}} + \frac{M_{y,Ed}}{M_{y,b,Rd}} + 1.5\frac{M_{z,Ed}}{M_{z,cb,Rd}} \le 1.0$$

$$\frac{589}{759} + \frac{11.11}{137} + 1.5 \times \left(\frac{0.35}{64}\right) = 0.87 < 1.0$$

Therefore, the resistance of the member is adequate.

13.7 Blue Book Approach

Page references in Section 13.7 are to P363 unless otherwise stated.

The design resistances may be obtained from SCI publication P363.

Consider the 203 × 203 × 46 UKC in S275 steel

13.7.1 Design value of bending moments and compression forces

Design compression force N_{Ed} = 589 kN — Sheet 2

Design bending moment about the *y-y* axis $M_{y,Ed}$ = 11.11 kNm

Design bending moment about the *z-z* axis $M_{z,Ed}$ = 0.35 kNm

13.7.2 Cross section classification

$N_{pl,Rd}$ = 1610 kN — Page C-166

$$n = \frac{N_{Ed}}{N_{pl,Ed}}$$

Limiting value of *n* for Class 2 sections is 1.0

$$n = \frac{589}{1610} = 0.37 < 1.0$$

Therefore, under bending and N_{Ed} = 589 kN the section is at least Class 2. — Page C-166

13.7.3 Simplified interaction criterion

As the sections meets the criteria in Access Steel document SN048 (see Section 13.8 of this example), the following verification may be used instead of the two verification expressions given in 6.3.3(4) BS EN 1993-1-1.

The criterion to verify is: — Access-steel document SN048

$$\frac{N_{Ed}}{N_{min,b,Rd}} + \frac{M_{y,Ed}}{M_{y,b,Rd}} + 1.5\frac{M_{z,Ed}}{M_{z,cb,Rd}} \leq 1.0$$

For buckling length L = 5 m and $n \leq 1.0$ — Page C-167

$N_{b,y,Rd}$ = 1310 kN

$N_{b,z,Rd}$ = 762 kN

Therefore,

$N_{min,b,Rd}$ = 762 kN

Conservatively, the value for $M_{b,Rd}$ may be taken from the axial and bending table in SCI P363 ($M_{b,Rd}$ = 109 kNm) where the values for $M_{b,Rd}$ are based on C_1 = 1.0. However a more exact value may be determined from the bending resistance table.

From Section 13.7 of this example, C_1 = 1.77 — Sheet 8

For C_1 = 1.77 and L = 5 m

$M_{b,Rd}$ = 135 kNm — Page C-78

$$M_{z,cb,Rd} = \frac{W_{pl,z} f_y}{\gamma_{M1}}$$ — Access-steel document SN048

As the section is Class 2 and the UK National Annex to BS EN 1993-1-1 gives the same value for γ_{M0} and γ_{M1},

$$M_{z,cb,Rd} = M_{c,z,Rd} = \frac{W_{pl,z} f_y}{\gamma_{M0}}$$

$$M_{z,cb,Rd} = 63.5 \text{ kNm}$$

Page C-78

Access Steel document SN048

Therefore,

$$\frac{N_{Ed}}{N_{min,b,Rd}} + \frac{M_{y,Ed}}{M_{y,b,Rd}} + 1.5\frac{M_{z,Ed}}{M_{z,cb,Rd}}$$

$$= \left(\frac{589}{762}\right) + \left(\frac{11.11}{135}\right) + 1.5 \times \left(\frac{0.35}{63.5}\right) = 0.86 < 1.0$$

Therefore, the resistance of the member is adequate.

14 End Plate beam to column flange connection

References are to BS EN 1993-1-8: 2005, including its National Annex, unless otherwise stated.

14.1 Scope

Determine the shear and tying resistances of the "simple joint" end plate beam to column flange connection shown in Figure 14.1. The bolted connection uses non-preloaded bolts (i.e. Category A: Bearing type bolted connection).

For completeness, all the design verifications given below should be carried out. However, in practice, for "normal" connections, the verifications marked * will usually be the critical ones. In this example, only the calculations for resistances marked with an * are given.

Information for the other verifications may be found in SCI publication P358 and Access-steel documents SN017 and SN018 (www.access-steel.com).

For persistent and transient design situations

End plate bolt group*	$V_{Rd,1}$
Supporting member in bearing	$V_{Rd,2}$
End plate in shear (gross section)	$V_{Rd,3}$
End plate in shear (net section)	$V_{Rd,4}$
End plate in shear (block tearing)	$V_{Rd,5}$
End plate in bending	$V_{Rd,6}$
Beam web in shear*	$V_{Rd,7}$

For accidental design situations (tying resistance)

Bolts in tension	$N_{Rd,u,1}$
End plate in bending*	$N_{Rd,u,2}$
Supporting member in bending	$N_{Rd,u,3}$
Beam web in tension	$N_{Rd,u,4}$

In addition to the resistance calculations indicated above, the following design aspects are covered in this example:

- Ductility of the end plate connection
- Design of the fillet weld

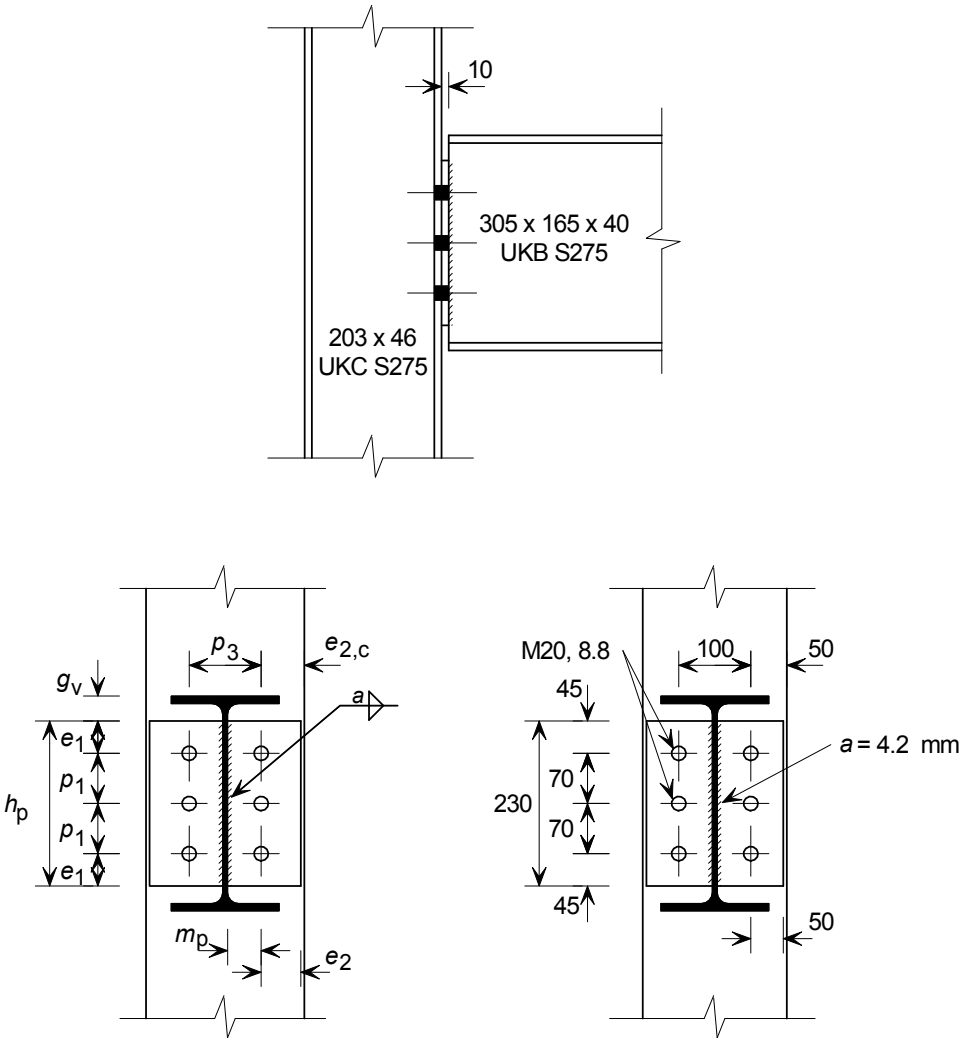

Figure 14.1

14.2 Joint details and section properties

Configuration	Beam to column flange	
Column	203 × 203 × 46 UKC, S275	3.4.1
Beam	305 × 165 × 40 UKB, S275	
Type of connection	End plate connection using non-preloaded bolts Therefore it is a Category A: Bearing type connection	
End plate	230 × 200 × 10, S275	

203 × 203 × 46 UKC, S275

From section property tables:

Depth	h_c	= 203.2 mm	P363
Width	b_c	= 203.2 mm	
Web thickness	$t_{w,c}$	= 7.2 mm	
Flange thickness	$t_{f,c}$	= 11.0 mm	
Root radius	r_c	= 10.2 mm	
Second moment of area *y-y* axis	$I_{y,c}$	= 4 570 cm^4	
Area	A_c	= 58.7 cm^2	

The sub-script ‘c’ has been included to denote the properties relating to the column.

For buildings that will be built in the UK, the nominal values of the yield strength (f_y) and the ultimate strength (f_u) for structural steel should be those obtained from the product standard. Where a range is given, the lowest nominal value should be used. — BS EN 1993-1-1 NA.2.4

For S275 steel and $t \leq 16$ mm — BS EN 10025-2 Table 7

Yield strength $f_{y,c}$ $= R_{eH} = 275$ N/mm^2

Ultimate tensile strength $f_{u,c}$ $= R_m = 410$ N/mm^2

305 × 165 × 40 UKB, S275

From section property tables: — P363

Depth h_{b1} = 303.4 mm

Width b_{b1} = 165.0 mm

Web thickness $t_{w,b1}$ = 6.0 mm

Flange thickness $t_{f,b1}$ = 10.2 mm

Root radius r_{b1} = 8.9 mm

Second moment of area y axis $I_{y,b1}$ = 8 500 cm^4

Area A_{b1} = 51.3 cm^2

The sub-script 'b' has been included to denote the properties relating to the beam.

For S275 steel and $t \leq 16$ mm — BS EN 10025-2 Table 7

Yield strength $f_{y,b1}$ $= R_{eH} = 275$ N/mm^2

Ultimate tensile strength $f_{u,b1}$ $= R_m = 410$ N/mm^2

End Plate – 230 × 200 × 10, S275

Distance below top of beam g_v = 35 mm

Plate depth h_p = 230 mm

Plate width b_p = 200 mm

Plate thickness t_p = 10 mm

For S275 steel and $t \leq 16$ mm — BS EN 10025-2 Table 7

Yield strength $f_{y,p}$ $= R_{eH} = 275$ N/mm^2

Ultimate tensile strength $f_{u,p}$ $= R_m = 410$ N/mm^2

Direction of load transfer (1)

Number of bolt rows n_1 = 3

Plate edge to first bolt row e_1 = 45 mm

Pitch between bolt rows p_1 = 70 mm

Direction perpendicular to load transfer (2)

Number of vertical lines of bolts n_2 = 2

Plate edge to first bolt line e_2 = 50 mm

Column edge to bolt line $e_{2,c}$ = 51.5 mm

Gauge (i.e. distance between cross centres) p_3 = 100 mm

Bolts

Non pre-loaded, M20 Class 8.8 bolts

Total number of bolts ($n = n_1 \times n_2$)	n	= 6	
Tensile stress area	A_s	= 245 mm^2	P363 Page C-306
Diameter of the shank	d	= 20 mm	
Diameter of the holes	d_0	= 22 mm	
Diameter of the washer	d_w	= 37 mm	
Yield strength	f_{yb}	= 640 N/mm^2	Table 3.1
Ultimate tensile strength	f_{ub}	= 800 N/mm^2	

Fillet welds

Leg length		6 mm
Throat thickness	a	= 4.2 mm

14.3 Ductility

To ensure sufficient ductility of the beam to column flange connection, at least one of the following criteria should be satisfied.

$$t_p \le \frac{d}{2.8}\sqrt{\frac{f_{ub}}{f_{y,p}}} \quad \text{or} \quad t_{f,c} \le \frac{d}{2.8}\sqrt{\frac{f_{ub}}{f_{y,c}}}$$

Access-steel document SN014

$$\frac{d}{2.8}\sqrt{\frac{f_{ub}}{f_{y,p}}} = \left(\frac{20}{2.8}\right) \times \sqrt{\frac{800}{275}} = 12.18 \text{ mm}$$

t_p = 10 mm < 12.18 mm

$t_{f,c}$ = 11 mm < 12.18 mm

Therefore the connection has sufficient ductility.

14.4 Partial factors for resistance

14.4.1 Structural steel

γ_{M0} = 1.0 — BS EN 1993-1-1 NA.2.15

γ_{M2} = 1.25 (plates in bearing in bolted connections) — Table NA.1

For tying resistance verification, $\gamma_{M,u}$ = 1.1 — Access-steel document SN015

14.4.2 Bolts

γ_{M2} = 1.25 — Table NA.1

14.4.3 Welds

γ_{M2} = 1.25 — Table NA.1

14.5 Resistance of the fillet welds

To ensure that the fillet welds are full strength, the throat thickness is verified against the requirement given in SCI publication P358.

For S275 steel — P358

$a \geq 0.45t_{w,b1}$

$0.45t_{w,b1} = 0.45 \times 6 = 2.7$ mm

Here, $a = 4.2$ mm (Sheet 4)

4.2 mm > 2.7 mm

Therefore the fillet weld is adequate.

14.6 Shear resistance of the connection

14.6.1 End plate bolt group,

The design resistance of the bolt group V_{Rd} is: — 3.7(1)

$V_{Rd} = \sum F_{b,Rd}$ if $F_{v,Rd} \geq (F_{b,Rd})_{max}$

$V_{Rd} = n(F_{b,Rd})_{min}$ if $(F_{b,Rd})_{min} \leq F_{v,Rd} < (F_{b,Rd})_{max}$

$V_{Rd} = nF_{v,Rd}$ if $(F_{b,Rd})_{min} > F_{v,Rd}$

where:

$F_{b,Rd}$ is the design bearing resistance of a single bolt

$F_{v,Rd}$ is the design shear resistance of a single bolt.

Resistance of a single bolt in shear

The shear resistance of a single bolt ($F_{v,Rd}$) is given by:

$$F_{v,Rd} = \frac{\alpha_v f_{ub} A}{\gamma_{M2}}$$ — Table 3.4

where:

α_v = 0.6 for class 8.8 bolts

$A = A_s = 245$ mm^2

$$F_{v,Rd} = \frac{0.6 \times 800 \times 245}{1.25} \times 10^{-3} = 94.1 \text{ kN}$$

End plate in bearing

The bearing resistance of a single bolt ($F_{b,Rd}$) is:

$$F_{b,Rd} = \frac{k_1 \alpha_b f_{u,p} d t_p}{\gamma_{M2}}$$ — Table 3.4

where, α_b is the least value of α_d, $\frac{f_{ub}}{f_{u,p}}$ and 1.0

For end bolts $\alpha_d = \frac{e_1}{3d_o} = \frac{45}{3\times 22} = 0.68$

For inner bolts $\alpha_d = \frac{p_1}{3d_o} - \frac{1}{4} = \left(\frac{70}{3\times 22}\right) - \left(\frac{1}{4}\right) = 0.81$

$\frac{f_{ub}}{f_{u,p}} = \frac{800}{410} = 1.95$

Therefore

$\alpha_b = 0.68$

For edge bolts k_1 is the smaller of $2.8\frac{e_2}{d_o} - 1.7$ or 2.5.

$2.8\frac{e_2}{d_0} - 1.7 = 2.8\times\left(\frac{50}{22}\right) - 1.7 = 4.66$

Therefore, for edge bolts

$k_1 = 2.5$

Therefore the minimum bearing resistance for a single bolt is:

$F_{b,Rd} = \frac{2.5\times 0.68\times 410\times 20\times 10}{1.25}\times 10^{-3} = 112$ kN

Table 3.4

Resistance of end plate bolt group

$F_{v,Rd} = 94.1$ kN

$F_{b,Rd} = 112$ kN

As $(F_{b,Rd})_{min} > F_{v,Rd}$ the resistance of the end plate bolt group is:

3.7(1)

$V_{Rd} = nF_{v,Rd}$

To allow for the presence of tension in the bolts, a factor of 0.8 is applied to the resistance. Therefore the resistance of the end plate bolt group is:

Access-steel document SN014

$V_{Rd,1} = 0.8nF_{v,Rd} = 0.8\times 6\times 94.1 = 451.7$ kN

14.6.2 Beam web in shear

The shear resistance of the beam web ($V_{Rd,7}$) is

$V_{Rd.7} = \frac{A_v f_{y.b}/\sqrt{3}}{\gamma_{M0}}$

BS EN1993-1-1 6.2.6(2)

From the guidance given in Section 10 of SN0014, the shear area (A_v) to be considered for the beam web may be taken as:

Access-steel document SN014

$A_v = 0.9h_p t_{w,b} = 0.9\times 230\times 6 = 1242.0$ mm^2

$V_{Rd,7} = \frac{1242\times 275/\sqrt{3}}{1.0}\times 10^{-3} = 197$ kN

14.7 Tying resistance of the connection

BS EN 1993-1-8 does not give any guidance on tying resistance of connections. Therefore, the guidance given in the NCCI Access Steel document SN015 is used to determine the tying resistance of the end plate.

As large strains and large deformations are associated with tying resistance failure modes, SN015 recommends that ultimate tensile strengths (f_u) be used and the partial factor for tying $\gamma_{M,u}$ be taken as 1.1.

14.7.1 End plate in bending

An equivalent T-stub is used to represent the end plate in bending. The resistance of the end plate in bending ($N_{Rd,u,2}$) is taken as the minimum value for the resistance to mode 1 or mode 2 failure.

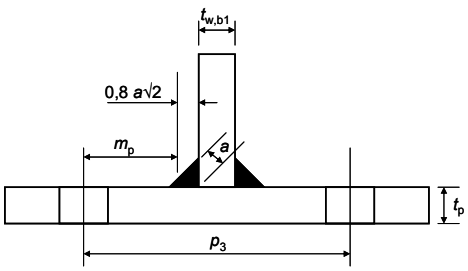

$N_{Rd,u,2}$ is the minimum value of $F_{T,1,Rd}$ or $F_{T,2,Rd}$.

Mode 1 failure – Complete failure of the T-stub flamge

Access Steel document SN015

$$F_{T,1,Rd} = \frac{(8n_p - 2e_w)M_{pl,1,Rd,u}}{2m_p n_p - e_w(m_p + n_p)}$$

Mode 2 failure – Bolt failure with yielding of the T stub flange

$$F_{T,2,Rd} = \frac{2M_{pl,2,Rd,u} + n_p \sum F_{t,Rd}}{m_p + n_p}$$

Determine the required parameters;

$$e_w = \frac{d_w}{4} = \frac{37}{4} = 9.25 \text{ mm}$$

n_p is the least value of e_2; $e_{2,c}$; $1.25m_p$.

$e_2 = 50.0$ mm

$e_{2,c} = 51.5$ mm

$$m_p = \frac{(p_3 - t_{w,b1} - 2\times 0.8\times a\times\sqrt{2})}{2}$$

$$= \frac{(100 - 6 - 2\times 0.8\times 4.2\times\sqrt{2})}{2} = 42.25 \text{ mm}$$

$$1.25m_p = 1.25\times 42.25 = 52.81 \text{ mm}$$

Therefore,

$n_p = 50$ mm

$$M_{\text{pl,1,Rd,u}} = \frac{1}{4}\frac{h_{\text{p}} t_{\text{p}}^2 f_{\text{u,p}}}{\gamma_{\text{M,u}}} = \frac{1}{4} \times \left(\frac{230 \times 10^2 \times 410}{1.1} \right) \times 10^{-6} = 2.14 \text{ kNm}$$

Mode 1 failure – Complete failure of the T-stub flamge

$$F_{\text{T,1,Rd}} = \frac{\left(8 n_{\text{p}} - 2 e_{\text{w}}\right) M_{\text{pl,1,Rd,u}}}{2 m_{\text{p}} n_{\text{p}} - e_{\text{w}} \left(m_{\text{p}} + n_{\text{p}}\right)}$$

$$F_{\text{T,1,Rd}} = \frac{\left[(8 \times 50) - (2 \times 9.25)\right] \times 2.14 \times 10^3}{(2 \times 42.25 \times 50) - \left[9.25 \times \left(42.25 + 50\right)\right]} = 242 \text{ kN}$$

Mode 2 failure – Bolt failure with yielding of the T stub flange

$$F_{\text{T,2,Rd}} = \frac{2 M_{\text{pl,2,Rd,u}} + n_{\text{p}} \sum F_{\text{t,Rd,u}}}{m_{\text{p}} + n_{\text{p}}}$$

$$F_{\text{t,Rd.u}} = \frac{k_2 f_{\text{ub}} A_{\text{s}}}{\gamma_{\text{M,u}}}$$

$k_2 = 0.9$ Table 3.4

$$F_{\text{t,Rd,u}} = \frac{0.9 \times 800 \times 245}{1.1} \times 10^{-3} = 160.4 \text{ kN}$$

$$\Sigma F_{\text{t,Rd,u}} = n F_{\text{t,Rd,u}} = 6 \times 160.4 = 962.4 \text{ kN}$$

$$M_{\text{pl,2,Rd,u}} = M_{\text{pl,1,Rd,u}} = 2.14 \text{ kNm}$$

$$F_{\text{T,2,Rd}} = \frac{(2 \times 2.14 \times 10^6) + (50 \times 962.4 \times 10^3)}{42.25 + 50} \times 10^{-3} = 568 \text{ kN}$$

242 kN ($F_{\text{T,1,Rd}}$) < 568 kN ($F_{\text{T,2,Rd}}$)

Therefore the resistance of the end plate in bending is equal to the Mode 1 failure ($F_{\text{T,1,Rd}}$)

$N_{\text{Rd,u,2}} = 242$ kN

14.8 Summary

Tables 14.3 and 14.4 summarise the resistance values for all the applicable modes of failure. Calculations for the resistance values given in shaded boxes are not presented in this example.

Table 14.1 Joint shear resistance

Mode of failure	Joint shear resistance	
End plate bolt group	$V_{Rd,1}$	452 kN
Supporting member in bearing	$V_{Rd,2}$	877 kN
End plate in shear (gross section)	$V_{Rd,3}$	575 kN
End plate in shear (net section)	$V_{Rd,4}$	776 kN
End plate in shear (block shear)	$V_{Rd,5}$	668 kN
End plate in bending	$V_{Rd,6}$	∞
Beam web in shear	$\boldsymbol{V_{Rd,7}}$	**197 kN**

Therefore, the design shear resistance of the end plate connection is
$V_{Rd} = V_{Rd,7} = 197$ kN

Design shear force, $V_{Ed} = 100$ kN

Table 14.2 Joint tying resistance

Mode of failure	Joint tying resistance	
Bolts in tension	$N_{Rd,u,1}$	962 kN
End plate in bending	$\boldsymbol{N_{Rd,u,2}}$	**242 kN**
Supporting member in bending	$N_{Rd,u,3}$	N / A
Beam web in tension	$N_{Rd,u,4}$	514 kN

Note: If the column flange thickness is less than the end plate thickness, the column flange in bending should be verified.

The design tying resistance of the end plate connection is
$N_{Rd,u} = N_{Rd,u,2} = 242$ kN

References are to BS EN 1993-1-8: 2005, including its National Annex, unless otherwise stated.

15 Fin plate beam to column flange connection

15.1 Scope

Determine the shear and tying resistances of the "simple joint" fin plate beam to column flange connection shown in Figure 15.1. The bolted connection uses non-preloaded bolts (i.e. Category A: Bearing type bolted connection).

For completeness, all the design verifications given in Table 15.1 and 15.2 should be carried out. However, in practice, for "normal" connections, the verifications marked with an * will usually be the critical ones. In this example, only the calculations for resistances marked with an * are given.

Information for the other verifications may be found in SCI publication, P358 and Access-steel documents SN017 and SN018 (www.access-steel.com).

For persistent and transient design situations

Bolts in shear*	$V_{Rd,1}$
Fin plate in bearing*	$V_{Rd,2}$
Fin plate in shear (gross section)	$V_{Rd,3}$
Fin plate in shear (net section)	$V_{Rd,4}$
Fin plate in shear (block tearing)	$V_{Rd,5}$
Fin plate in bending	$V_{Rd,6}$
Fin plate in buckling (LTB)	$V_{Rd,7}$
Beam web in bearing*	$V_{Rd,8}$
Beam web in shear (gross section)	$V_{Rd,9}$
Beam web in shear (net section)	$V_{Rd,10}$
Beam web in shear (block tearing)	$V_{Rd,11}$
Supporting element (punching shear)	(This mode is not appropriate for fin plate connections to column flanges)

For accidental design situations (tying resistance)

Bolts in shear*	$N_{Rd,u,1}$
Fin plate in bearing*	$N_{Rd,u,2}$
Fin plate in tension (block tearing)	$N_{Rd,u,3}$
Fin plate in tension (net section)	$N_{Rd,u,4}$
Beam web in bearing*	$N_{Rd,u,5}$
Beam web in tension (block tearing)	$N_{Rd,u,6}$
Beam web in tension (net section)	$N_{Rd,u,7}$
Supporting member in bending	(This mode is not appropriate for fin plate connections to column flanges)

In addition to the resistance calculations indicated on sheet 1, the following design aspects are covered in this example:

- Rotation requirements
- Design of fillet welds
- Ductility of fin plate connection

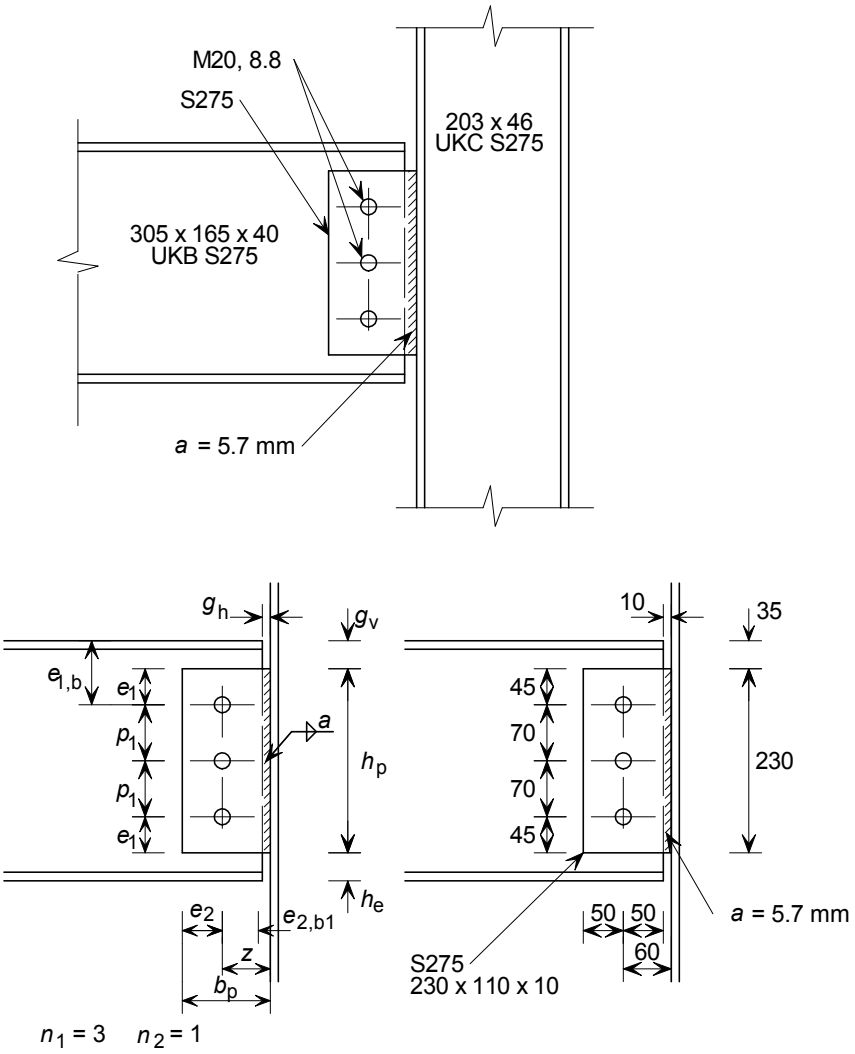

Figure 15.1

15.2 Joint details and section properties

Configuration	Beam to column flange
Column	203 × 203 × 46 UKC, S275
Beam	305 × 165 × 40 UKB, S275
Type of connection	Fin plate connection using non-preloaded bolts. Therefore it is a Category A: Bearing type connection.
Fin plate	230 × 110 × 10, S275

203 × 203 × 46 UKC, S275

From section property tables:

Depth	h_c	= 203.2 mm	P363
Width	b_c	= 203.2 mm	
Web thickness	$t_{w,c}$	= 7.2 mm	
Flange thickness	$t_{f,c}$	= 11.0 mm	
Root radius	r_c	= 10.2 mm	
Second moment of area y axis	$I_{y,c}$	= 4570 cm^4	
Area	A_c	= 58.7 cm^2	

For buildings that will be built in the UK, the nominal values of the yield strength (f_y) and the ultimate strength (f_u) for structural steel should be those obtained from the product standard. Where a range is given, the lowest nominal value should be used. — BS EN 1993-1-1 NA.2.4

For S275 steel and $t \leq 16$ mm — BS EN 10025-2 Table 7

Yield strength	$f_{y,c}$	= R_{eH}	= 275 N/mm^2
Ultimate tensile strength	$f_{u,c}$	= R_m	= 410 N/mm^2

305 × 165 × 40 UKB, S275

From section property tables:

Depth	h_b	= 303.4 mm	P363
Width	b_b	= 165.0 mm	
Web thickness	$t_{w,b}$	= 6.0 mm	
Flange thickness	$t_{f,b}$	= 10.2 mm	
Root radius	r_b	= 8.9 mm	
Second moment of area y axis	$I_{y,b}$	= 8500 cm^4	
Area	A_b	= 51.3 cm^2	

For S275 steel and $t \leq 16$ mm — BS EN 10025-2 Table 7

Yield strength	$f_{y,b}$	= R_{eH}	= 275 N/mm^2
Ultimate tensile strength	$f_{u,b}$	= R_m	= 410 N/mm^2

Fin plate – 230 × 110 × 10, S275

Distance below top of beam	g_v	= 35 mm
Horizontal gap (end beam to column flange)	g_h	= 10 mm
Plate depth	h_p	= 230 mm
Plate width	b_p	= 110 mm
Plate thickness	t_p	= 10 mm

For S275 steel and $t \leq 16$ mm — BS EN 10025-2 Table 7

Yield strength	$f_{y,p}$	= R_{eH}	= 275 N/mm^2
Ultimate tensile strength	$f_{u,p}$	= R_m	= 410 N/mm^2

Direction of load transfer (1)

Number of bolt rows	n_1	= 3
Plate edge to first bolt row	e_1	= 45 mm
Beam edge to first bolt row	$e_{1,b}$	= 80 mm
Pitch between bolt rows	p_1	= 70 mm

Direction perpendicular to load transfer (2)

Number of vertical lines of bolts	n_2	= 1	
Plate edge to first bolt line	e_2	= 50 mm	
Beam edge to last bolt line	$e_{2,b}$	= 50 mm	
Lever arm	z	= 60 mm	

Bolts

Non pre-loaded, M20 Class 8.8 bolts

Total number of bolts ($n = n_1 \times n_2$)	n	= 3	
Tensile stress area	A_s	= 245 mm^2	P363 Page C-306
Diameter of the shank	d	= 20 mm	
Diameter of the holes	d_0	= 22 mm	
Yield strength	f_{yb}	= 640 N/mm^2	Table 3.1
Ultimate tensile strength	f_{ub}	= 800 N/mm^2	

Welds

Leg length		= 8 mm	
Throat thickness	a	= 5.7 mm	

15.3 Rotational requirements

It is assumed that there is sufficient rotation capacity, because the details given in Access-steel document SN016 (www.access-steel.com) have been adopted.

15.4 Partial factors for resistance

15.4.1 Structural steel

γ_{M0} = 1.0 — BS EN 1993-1-1 NA.2.15

Plate in bearing

γ_{M2} = 1.25 — Table NA.1

For tying resistance verification, $\gamma_{M,u}$ = 1.1 — Access-steel document SN018

15.4.2 Bolts

γ_{M2} = 1.25 — Table NA.1

For tying resistance verification, $\gamma_{M,u}$ = 1.1 — Access-steel document SN018

15.4.3 Welds

γ_{M2} = 1.25

Table NA.1

15.5 Resistance of the fillet welds

For an S275 fin plate verify that the throat thickness (a) of the fillet weld is:.

$a \geq 0.5t_p$ P358

$0.5t_p = 0.5 \times 10 = 5$ mm

Here, $a = 5.7$ mm (Sheet 4)

As 5.7 mm > 5 mm, the fillet weld is adequate.

15.6 Shear resistance of the joint

15.6.1 Bolts in shear

The shear resistance of a single bolt, $F_{v,Rd}$ is given by: Table 3.4

$$F_{v,Rd} = \frac{\alpha_v f_{ub} A}{\gamma_{M2}}$$

where:

$\alpha_v = 0.6$ for class 8.8 bolts

$A = A_s = 245 \text{ mm}^2$

$$F_{v,Rd} = \frac{0.6 \times 800 \times 245}{1.25} \times 10^{-3} = 94.1 \text{ kN}$$

For a single vertical line of bolts (i.e. $n_2 = 1$ and $n = n_1$)

$\alpha = 0$ and

$$\beta = \frac{6z}{n(n+1)p_1} = \frac{6 \times 60}{3 \times 4 \times 70} = 0.43$$

The shear resistance of the bolts in the joint is

$$V_{Rd,1} = \frac{n F_{v,Rd}}{\sqrt{(1+\alpha n)^2 + (\beta n)^2}}$$

$$V_{Rd,1} = \frac{3 \times 94.1}{\sqrt{(1+0\times3)^2 + (0.43\times3)^2}} = 173 \text{ kN}$$

15.6.2 Fin plate in bearing

For a single vertical line of bolts (i.e. $n_2 = 1$ and $n = n_1$)

$\alpha = 0$ and $\beta = 0.43$ (from section 15.6.1)

The bearing resistance of a single bolt ($F_{b,Rd}$) is given by Table 3.4

$$F_{b,Rd} = \frac{k_1 \alpha_b f_u d t}{\gamma_{M2}}$$

Therefore vertical bearing resistance of a single bolt on a fin plate, $F_{b,Rd,ver}$ is:

$$F_{b,Rd,ver} = \frac{k_1 \alpha_b f_{u,p} d t_p}{\gamma_{M2}}$$

where:

α_b is the least value of $\frac{e_1}{3d_0}$; $\frac{p_1}{3d_0} - \frac{1}{4}$; $\frac{f_{ub}}{f_{u,p}}$ and 1.0.

$$\frac{e_1}{3d_0} = \frac{45}{3 \times 22} = 0.68$$

$$\frac{p_1}{3d_0} - \frac{1}{4} = \left(\frac{70}{3 \times 22}\right) - \left(\frac{1}{4}\right) = 0.81$$

$$\frac{f_{ub}}{f_{u,p}} = \frac{800}{410} = 1.95$$

Therefore, $\alpha_b = 0.68$

For edge bolts k_1 is the lesser value of $\frac{2.8 \times e_2}{d_0} - 1.7$ and 2.5

$$\frac{2.8 \times e_2}{d_0} - 1.7 = \left(\frac{2.8 \times 50}{22}\right) - 1.7 = 4.66$$

Therefore, $k_1 = 2.5$

Thus, the vertical bearing resistance of a single bolt on a fin plate, $F_{b,Rd,ver}$ is:

$$F_{b,Rd,ver} = \frac{2.5 \times 0.68 \times 410 \times 20 \times 10}{1.25} \times 10^{-3} = 111.5 \text{ kN}$$

The horizontal bearing resistance of a single bolt in a fin plate ($F_{b,Rd,hor}$) is — Table 3.4

$$F_{b,Rd,hor} = \frac{k_1 \alpha_b f_{u,p} d t_p}{\gamma_{M2}}$$

where:

α_b is the least value of $\frac{e_2}{3d_0}$; $\frac{f_{ub}}{f_{u,p}}$ and 1.0

$$\frac{e_2}{3d_0} = \frac{50}{3 \times 22} = 0.76$$

$$\frac{f_{ub}}{f_{u,p}} = \frac{800}{410} = 1.95$$

Therefore, $\alpha_b = 0.76$

k_1 is the least value of $\frac{2.8e_1}{d_0} - 1.7$; $\frac{1.4p_1}{d_0} - 1.7$ and 2.5

$$\frac{2.8e_1}{d_0} - 1.7 = \left(\frac{2.8 \times 45}{22}\right) - 1.7 = 4.03$$

$$\frac{1.4p_1}{d_0} - 1.7 = \left(\frac{1.4 \times 70}{22}\right) - 1.7 = 2.75$$

Therefore, $k_1 = 2.5$

Thus, the horizobtal bearing resitance of a single bolt is

$$F_{\mathrm{b,Rd,hor}} = \frac{2.5 \times 0.76 \times 410 \times 20 \times 10}{1.25} \times 10^{-3} = 124.6 \text{ kN}$$

The bearing resistance of the fin plate is

Access-steel document SN017

$$V_{\mathrm{Rd,2}} = \frac{n}{\sqrt{\left(\frac{1+\alpha\, n}{F_{\mathrm{b,Rd,ver}}}\right)^2 + \left(\frac{\beta\, n}{F_{\mathrm{b,Rd,hor}}}\right)^2}}$$

$$V_{\mathrm{Rd,2}} = \frac{3}{\sqrt{\left(\frac{1+0\times 3}{111.5}\right)^2 + \left(\frac{0.43\times 3}{124.6}\right)^2}} = 219 \text{ kN}$$

15.6.3 Beam web in bearing

For a single vertical line of bolts (i.e. $n_2 = 1$ and $n = n_1$)

$\alpha = 0$ and $\beta = 0.43$ (from Section 15.6.1)

The bearing resistance of a single bolt ($F_{\mathrm{b,Rd,}}$) is:

$$F_{\mathrm{b,Rd,}} = \frac{k_1 \alpha_{\mathrm{b}} f_{\mathrm{u}} d t}{\gamma_{\mathrm{M2}}}$$

Therefore the vertical bearing resistance of a single bolt in a beam web, ($F_{\mathrm{b,Rd,ver}}$) is:

$$F_{\mathrm{b,Rd,ver}} = \frac{k_1 \alpha_{\mathrm{b}} f_{\mathrm{u,b}} d\, t_{\mathrm{w,b}}}{\gamma_{\mathrm{M2}}}$$

where:

α_{b} is the least value of $\frac{p_1}{3d_0} - \frac{1}{4}$; $\frac{f_{\mathrm{ub}}}{f_{\mathrm{u,b}}}$ and 1.0

$$\frac{p_1}{3d_0} - \frac{1}{4} = \left(\frac{70}{3 \times 22}\right) - \frac{1}{4} = 0.81$$

$$\frac{f_{\mathrm{ub}}}{f_{\mathrm{u,b}}} = \frac{800}{410} = 1.95$$

Therefore, $\alpha_{\mathrm{b}} = 0.81$

k_1 is the lesser value of:

$$\frac{2.8e_{2,b}}{d_0} - 1.7 = \left(\frac{2.8 \times 50}{22}\right) - 1.7 = 4.66$$

and 2.5

Therefore:

$k_1 = 2.5$

Thus, the vertical bearing resitance of a single bolt in the beam web is

$$F_{b,Rd,ver} = \frac{2.5 \times 0.81 \times 410 \times 20 \times 6}{1.25} \times 10^{-3} = 79.7 \text{ kN}$$

The horizontal bearing resistance of a single bolt in the beam web ($F_{b,Rd,hor}$) is

$$F_{b,Rd,hor} = \frac{k_1 \alpha_b f_{u,b} d\, t_{w,b}}{\gamma_{M2}}$$

where:

α_b is the least value of $\frac{e_{2,b}}{3d_0}$, $\frac{f_{ub}}{f_{u,b1}}$, and 1.0

$$\frac{e_{2,b}}{3d_0} = \frac{50}{3 \times 22} = 0.76$$

$$\frac{f_{ub}}{f_{u,b1}} = \frac{800}{410} = 1.95$$

Therefore, $\alpha_b = 0.76$

k_1 is the lesser value of:

$$\frac{1.4p_1}{d_0} - 1.7 = \left(\frac{1.4 \times 70}{22}\right) - 1.7 = 2.75$$

and 2.5

Therefore, $k_1 = 2.5$

Thus the horizontal bearing resitance of a single bolt is

$$F_{b,Rd,hor} = \frac{2.5 \times 0.76 \times 410 \times 20 \times 6}{1.25} \times 10^{-3} = 74.8 \text{ kN}$$

The bearing resistance in the beam web is

Access-steel document SN017

$$V_{Rd,8} = \frac{n}{\sqrt{\left(\frac{1+\alpha\, n}{F_{b,Rd,ver}}\right)^2 + \left(\frac{\beta\, n}{F_{b,Rd,hor}}\right)^2}}$$

$$V_{Rd,8} = \frac{3}{\sqrt{\left(\frac{1+0 \times 3}{79.7}\right)^2 + \left(\frac{0.43 \times 3}{74.8}\right)^2}} = 140.7 \text{ kN}$$

15.7 Tying resistance of the joint

BS EN 1993-1-8 does not give any guidance on tying resistance of connections. Therefore, the guidance given in the NCCI Access Steel document SN018 is used to determine the tying resistance of the end plate.

As large strains and large deformations are associated with tying resistance failure modes, SN015 recommends that ultimate tensile strengths (f_u) be used and the partial factor for tying $\gamma_{M,u}$ be taken as 1.1.

15.7.1 Bolts in shear

For a single bolt in shear

$$F_{v,Rd,u} = \frac{\alpha_v f_{ub} A}{\gamma_{M,u}}$$

where:

α_v = 0.6 for grade 8.8 bolts

$A = A_s = 245 \text{ mm}^2$

Thus, $F_{v,Rd,u} = \dfrac{0.6 \times 800 \times 245}{1.1} \times 10^{-3} = 106.9 \text{ kN}$

Therefore the tying resistance of all the bolts in the joint is

$$N_{Rd,u,1} = nF_{v,Rd,u} = 3 \times 106.9 = 320.7 \text{ kN}$$

15.7.2 Fin plate in bearing

The bearing resistance of a single bolt ($F_{b,Rd}$) is

$$F_{b,Rd} = \frac{k_1 \alpha_b f_u dt}{\gamma_{M,u}}$$

Therefore the horizontal bearing resistance of a single bolt in a fin plate in tying ($F_{b,Rd,u,hor}$) is

$$F_{b,Rd,u,hor} = \frac{k_1 \alpha_b f_{u,p} d t_p}{\gamma_{M,u}}$$

where:

α_b is the least value of $\dfrac{e_2}{3d_o}$; $\dfrac{f_{ub}}{f_{u,b1}}$ and 1.0

$$\frac{e_2}{3d_o} = \frac{50}{3 \times 22} = 0.76$$

$$\frac{f_{ub}}{f_{u,b1}} = \frac{800}{410} = 1.95$$

Therefore, $\alpha_b = 0.76$

k_1 is the least value of $2.8\dfrac{e_1}{d_o} - 1.7$; $1.4\dfrac{p_1}{d_o} - 1.7$ and 2.5

$$2.8\frac{e_1}{d_o} - 1.7 = \frac{2.8 \times 45}{22} - 1.7 = 4.03$$

$$1.4\frac{p_1}{d_o} - 1.7 = \frac{1.4 \times 70}{22} - 1.7 = 2.75$$

Therefore, $k_1 = 2.5$

The horizontal bearing resitance of a single bolt is

$$F_{b,Rd,u,hor} = \frac{2.5 \times 0.76 \times 410 \times 20 \times 10}{1.1} \times 10^{-3} = 141.6 \text{ kN}$$

Therefore the horizontal tying resistance of the fin plate in bearing in tying is

$$N_{Rd,u,2} = nF_{b,Rd.u.hor} = 3 \times 141.6 = 425 \text{ kN}$$

15.7.3 Beam web in bearing

The horizontal bearing resistance of a single bolt in the beam web ($F_{b,Rd,u,hor}$) is

$$F_{b,Rd,u,hor} = \frac{k_1 \alpha_b f_{u.b} d t_{w.b}}{\gamma_{M,u}}$$

where:

α_b is the least value of $\frac{e_{2,b}}{3d_o}$; $\frac{f_{ub}}{f_{u,b}}$; and 1.0

$$\frac{e_{2,b}}{3d_o} = \frac{50}{3 \times 22} = 0.76$$

$$\frac{f_{ub}}{f_{u,b}} = \frac{800}{410} = 1.95$$

Therefore:

$\alpha_b = 0.76$

k_1 is the least value of $1.4\frac{p_1}{d_o} - 1.7$ and 2.5

$$1.4\frac{p_1}{d_o} - 1.7 = \frac{1.4 \times 70}{22} - 1.7 = 2.75$$

Therefore, $k_1 = 2.5$

The horizontal bearing resitance of a single bolt in the web is

$$F_{b,Rd,u,hor} = \frac{2.5 \times 0.76 \times 410 \times 20 \times 6}{1.1} \times 10^{-3} = 85.0 \text{ kN}$$

The bearing resistance of the beam web is

$$N_{Rd,u,5} = nF_{b,Rd,u,hor} = 3 \times 85 = 255 \text{ kN}$$

15.8 Summary

Tables 15.3 and 15.4 summarise the resistance values for all the applicable modes of failure. Calculation of the values given in shaded boxes is not presented in this example.

Table 15.1 Joint shear resistance

Mode of failure	Joint shear resistance	
Bolts in shear	$V_{Rd,1}$	173 kN
Fin plate in bearing	$V_{Rd,2}$	219 kN
Fin plate in shear (gross section)	$V_{Rd,3}$	288 kN
Fin plate in shear (net section)	$V_{Rd,4}$	388 kN
Fin plate in shear (block shear)	$V_{Rd,5}$	270 kN
Fin plate in bending	$V_{Rd,6}$	N/A
Fin plate buckling	$V_{Rd,7}$	777 kN
Beam web in bearing	$\boldsymbol{V_{Rd,8}}$	**141 kN**
Beam web in shear (gross section)	$V_{Rd,9}$	319 kN
Beam web in shear (net section)	$V_{Rd,10}$	381 kN
Beam web in shear (block shear)	$V_{Rd,11}$	196 kN

The design shear resistance of the fin plate connection is

$V_{Rd} = V_{Rd,8} = 141$ kN

Table 15.2 Joint tying resistance

Mode of failure	Joint shear resistance	
Bolts in shear	$N_{Rd,u,1}$	321 kN
Fin plate in bearing	$N_{Rd,u,2}$	425 kN
Fin plate in tension (block tearing)	$N_{Rd,u,3}$	743 kN
Fin plate in tension (net section)	$N_{Rd,u,4}$	550 kN
Beam web in bearing	$\boldsymbol{N_{Rd,u,5}}$	**255 kN**
Beam web in tension (block tearing)	$N_{Rd,u,6}$	446 kN
Beam web in tension (net section)	$N_{Rd,u,7}$	330 kN
Supporting member in bending	$N_{Rd,u,8}$	N/A

The design tying resistance of the fin plate connection is
$N_{Rd,u} = N_{Rd,u,5} = 255$ kN

15.9 Ductility

Ductility is ensured by adopting details which have been demonstrated to be ductile by testing. In this case, the use of a 10 mm fin plate with M20 bolts and an 8 mm leg fillet weld is known to behave in a ductile manner.

16 Column splice – Bearing

References are to BS EN 1993-1-8: 2005, including its National Annex, unless otherwise stated.

16.1 Scope

Verify the adequacy of the column bearing splice shown in Figure 16.1 that connects a 254 × 254 × 73 UKC (upper section) to a 305 × 305 × 118 UKC (lower section).

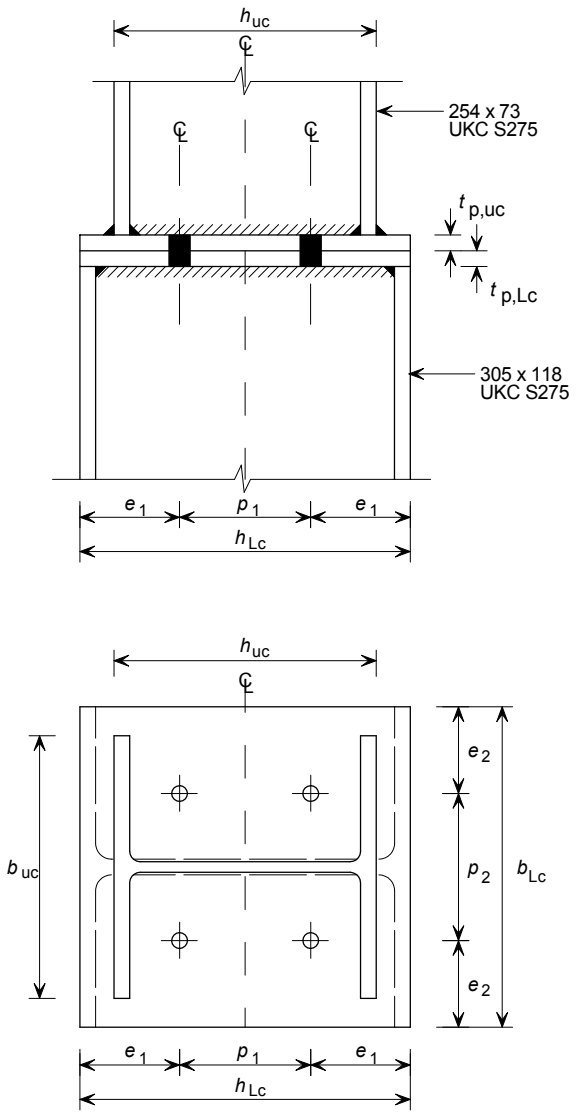

Figure 16.1

The design aspects covered in this example are:

- Determination of tying force to be resisted by the column splice
- Continuity of column stiffness at splice location
- Resistance of the splice to compression and moment
- Resistance of the splice to horizontal shear
- Design of the welds
- Tying resistance
  - Bolts in tension
  - Punching failure of bolts
  - Cap and base plates in bending
  - Weld in tension.

16.2 Joint data and section properties

Upper column

254 × 254 × 73 UKC in S275 steel — P363

Depth	h_{uc}	= 254.1 mm
Width	b_{uc}	= 254.6 mm
Thickness of the web	$t_{w,uc}$	= 8.6 mm
Thickness of the flange	$t_{f,uc}$	= 14.2 mm
Depth between fillets	d_{uc}	= 200.3 mm
Area	A_{uc}	= 93.1 cm^2

For buildings that will be built in the UK, the nominal values of the yield strength (f_y) and the ultimate strength (f_u) for structural steel should be those obtained from the product standard. Where a range is given, the lowest nominal value should be used. — BS EN 1993-1-1 NA.2.4

For S275 steel and $t \leq 16$ mm — BS EN 10025-2 Table 7

Yield strength	$f_{y,uc}$	$= R_{eH}$ = 275 N/mm^2
Ultimate tensile strength	$f_{u,uc}$	$= R_m$ = 410 N/mm^2

Lower column

305 × 305 × 118 UKC in S275 steel — P363

Depth	h_{Lc}	= 314.5 mm
Width	b_{Lc}	= 307.4 mm
Thickness of the web	$t_{w,Lc}$	= 12.0 mm
Thickness of the flange	$t_{f,Lc}$	= 18.7 mm
Depth between fillets	d_{Lc}	= 246.7 mm
Area	A_{Lc}	= 150.0 cm^2

For S275 steel and $16 < t \leq 40$ mm — BS EN 10025-2 Table 7

Yield strength	$f_{y,Lc}$	$= R_{eH}$ = 265 N/mm^2
Ultimate tensile strength	$f_{u,Lc}$	$= R_m$ = 410 N/mm^2

Cap and base plates

315 × 308 × 16 mm plate in S275 steel

Depth	h_p	= 315.0 mm	
Width	b_p	= 308.0 mm	
Thickness of plate	t_p	= 16.0 mm	
Diameter of bolt holes for M20 bolts	d_0	= 22 mm	
For S275 steel and $t \leq 16$ mm			BS EN 10025-2 Table 7
Yield strength	$f_{y,p}$	$= R_{eH}$ = 275 N/mm^2	
Ultimate tensile strength	$f_{u,p}$	$= R_m$ = 410 N/mm^2	

In the major axis (*y-y*)

Distance between bolts	p_1	= 140 mm
Plate edge to first bolt row	e_1	= 87 mm

In the minor axis (*z-z*)

Distance between bolts	p_2	= 120 mm
Plate edge to first bolt line	e_2	= 94 mm

Bolts

Non pre-loaded, M20 Class 8.8 bolts

Diameter of the shank	d	= 20 mm	P363 Page C-306
Tensile stress area	A_s	= 245 mm^2	
Yield strength	f_{yb}	= 640 N/mm^2	Table 3.1
Ultimate tensile strength	f_{ub}	= 800 N/mm^2	

16.2.1 Connection category

The connection is category A; bearing type with non preloaded bolts. 3.4.1(1)

16.3 Design forces at Ultimate Limit State

For persistent and transient design situations:

Design compression force due to permanent actions	$N_{Ed,G}$	= 825 kN
Design compression force due to variable actions	$N_{Ed,Q}$	= 942 kN
Total design axial compressive force	N_{Ed}	= 1767 kN
Design bending moment (due to permanent and variable loads)	M_{Ed}	= 15 kNm
Shear force (due to permanent and variable loads)	V_{Ed}	= 8 kN

For accidental design situations:

For framed buildings, the vertical tying force should be taken as a tensile force equal to the largest design vertical force applied to the column by a single floor due to the combined permanent and variable actions. This accidental action should not be combined with other permanent and variable actions that act on the structure. The partial factors on actions at the accidental state are all unity. BS EN 1991-1-7 A.6(2)

Here, the design force that is applied to the column by a single floor is 460 kN. Therefore, the tensile tying force that should be resisted by the column splice is:

N_{Ed} = 460 kN

16.4 Net tension

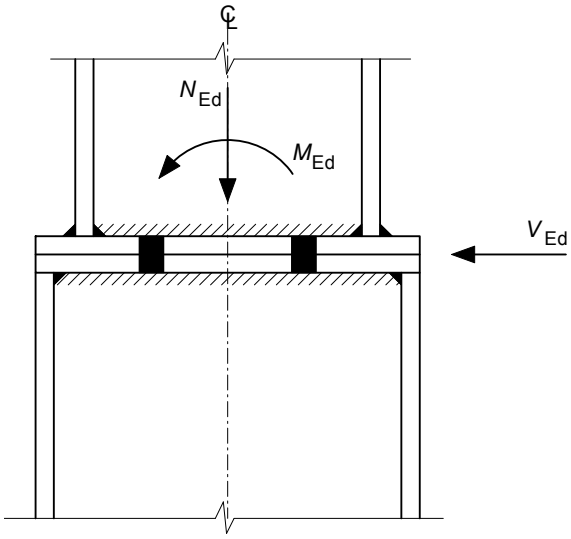

Figure 16.2

For the permanent and transient design situations, it should be determined whether any of the bolts will need to resist net tension due to the design forces acting on the splice.

For there to be no net tensile force on any of the connecting bolts, the following criteria should be met:

$$M_{Ed} \leq \frac{N_{Ed,G}\, p_1}{2}$$

$$\frac{N_{Ed,G}\, p_1}{2} = \frac{825 \times 140 \times 10^{-3}}{2} = 57.8 \text{ kNm}$$

$$M_{Ed} = 15 \text{ kNm} < 57.8 \text{ kNm}$$

Therefore, no net tension is present at the splice.

16.5 Partial factors for resistance

16.5.1 Structural steel

Table 2.1 of BS EN 1993-1-8 specifies the use of the partial factor γ_{M2} for the resistance of member cross sections, given in BS EN 1993-1-1, and for the resistance of bolts, rivets, pins, welds and plates in bearing. Here two values for γ_{M2} are required.

For plates in bearing
$\gamma_{M2} = 1.25$ — Table NA.1

For the resistance of cross sections
$\gamma_{M2} = 1.1$ — BS EN 1993-1-1 NA.2.15

For tying resistance verification, $\gamma_{M,u} = 1.1$ — SN015

16.5.2 Bolts

$\gamma_{M2} = 1.25$ — Table NA.1

For tying resistance verification, $\gamma_{M,u} = 1.1$ — SN015

16.5.3 Welds

$\gamma_{M2} = 1.25$ — Table NA.1

16.6 Continuity of column stiffness at splice

As the column bearing splice is located at a height of 600 mm above a floor level in a braced steel frame, full continuity of stiffness through the splice is not required. — Access-steel document SN025

16.7 Resistance of the splice to compression and moment

Consider the transfer of compressive forces in the flanges of the upper column to the flanges of the lower column.

If $t_{p,uc} + t_{p,lc} \geq \frac{h_{lc} - h_{uc}}{2}$, the forces can be transferred directly in compression, within a 45° dispersal from the upper column.

$t_{p,uc} + t_{p,lc} = 2\,t_p = 2 \times 16 = 32$ mm

$\frac{h_{lc} - h_{uc}}{2} = \frac{314.5 - 254.1}{2} = 30.2$ mm $<$ 32 mm therefore forces can be transferred in compression.

(If this were not satisfied, the transverse compression on the web would need to be checked using 6.2.6.2 of BS EN 1993-1-8.)

16.8 Resistance of the splice to horizontal shear

16.8.1 Bolts in shear

The shear resistance of a single bolt ($F_{v,Rd}$) is given by:

$$F_{v,Rd} = \frac{\alpha_v f_{ub} A}{\gamma_{M2}}$$ — Table 3.4

$\alpha_v = 0.6$ for class 8.8 bolts

As the shear plane passes through the threaded part of the bolt:

$A = A_s = 245$ mm^2

Therefore, the shear resistance of a single bolt with a single shear plane is:

$$F_{v,Rd} = \frac{0.6 \times 800 \times 245}{1.25} \times 10^{-3} = 94.1 \text{ kN / bolt}$$

16.8.2 Cap and base plates in bearing

The bearing resistance of a single bolt ($F_{b,Rd}$) is given by:

$$F_{b,Rd} = \frac{k_1 \alpha_b f_{u,p} d\, t_p}{\gamma_{M2}}$$ — Table 3.4

where:

α_b is the least value of α_b; $\dfrac{f_{ub}}{f_{u,p}}$ and 1.0

For the end bolts, α_b is not applicable because the column flange is welded to the cap and base plates.

For inner bolts $\alpha_b = \dfrac{p_1}{3d_o} - \dfrac{1}{4} = \left(\dfrac{140}{3 \times 22}\right) - \left(\dfrac{1}{4}\right) = 1.81$

$$\frac{f_{ub}}{f_{u,p}} = \frac{800}{410} = 1.95$$

Therefore, for both end and inner bolts, $a_b = 1.0$

For edge bolts k_1 is the smaller of $2.8\dfrac{e_2}{d_o} - 1.7$ and 2.5.

$$2.8\frac{e_2}{d_o} - 1.7 = \left(\frac{2.8 \times 94}{22}\right) - 1.7 = 10.3 > 2.5$$

For inner bolts k_1 is the smaller of $1.4\dfrac{p_2}{d_o} - 1.7$ and 2.5.

$$1.4\frac{p_2}{d_o} - 1.7 = \left(\frac{1.4 \times 120}{22}\right) - 1.7 = 5.9 > 2.5$$

Therefore, for both edge and inner bolts, $k_1 = 2.5$

Therefore the bearing resistance for a single bolt is:

$$F_{b,Rd} = \frac{2.5 \times 1.0 \times 410 \times 20 \times 16}{1.25} \times 10^{-3} = 262 \text{ kN}$$ Table 3.4

Note: As the above equation uses the ultimate strength of the division plate, a value of 1.25 has been used for the partial factor γ_{M2} (plates in bearing Sheet 5).

16.8.3 Resistance of a group of bolts

The shear resistance of a single bolt with a single shear plane is: Sheet 5

$F_{v,Rd} = 94.1$ kN

The bearing resistance for a single bolt is:

$F_{b,Rd} = 262$ kN

As $F_{v,Rd} < F_{b,Rd}$ the resistance of the group of four bolts in the splice is determined as: 3.7(1)

$4F_{v,Rd} = 4 \times 94.1 = 376$ kN

Therefore, the resistance of the splice to horizontal shear is:

$V_{Rd} = 376$ kN

$$\frac{V_{Ed}}{V_{Rd}} = \frac{8}{376} = 0.02 < 1.0$$

Therefore the resistance of the splice to horizontal shear is adequate.

16.9 Weld design

BS EN 1993-1-8 presents two methods for determining the resistance of a fillet weld, the directional method (more exact) and the simplified method.

The simplified method for calculating the design resistance of the fillet weld is used here.

16.9.1 Resistance to horizontal shear

Verify that:

$$\frac{V_{\text{Ed}}}{V_{\text{w,Rd}}} \leq 1$$

The design weld resistance per unit length, — 4.5.3.3(2)

$$F_{\text{w,Rd}} = f_{\text{vw,d}}\, a$$

where:

$$f_{\text{vw,d}} = \frac{f_{\text{u}} / \sqrt{3}}{\beta_{\text{w}} \gamma_{\text{M2}}}$$ — 4.5.3.3(3)

For S275 steel, $\beta_{\text{w}} = 0.85$ — Table 4.1

f_{u} relates to the weaker part jointed by the weld, therefore for S275: — 4.5.3.2(6)

$f_{\text{u}} = 410 \text{ N/mm}^2$ — Sheet 2

Hence $f_{\text{vw,d}} = \dfrac{410/\sqrt{3}}{0.85 \times 1.25} = 223 \text{ N/mm}^2$ — 4.5.3.3(3)

The throat thickness of the weld that corresponds to a leg of 6 mm is:

$a = 4.2$ mm

Therefore, the design weld resistance per mm is: — 4.5.3.3(2)

$$F_{\text{w,Rd}} = 223 \times 4.2 = 937 \text{ N/mm}$$

Conservatively consider the effective weld length (l) to be:

$$l = 2(b_{\text{uc}} + d_{\text{uc}}) = 2 \times (254.6 + 200.3) = 910 \text{ mm}$$

$$V_{\text{w,Rd}} = F_{\text{w,Rd}} \times l = 937 \times 910 \times 10^{-3} = 853 \text{ kN}$$

$$\frac{V_{\text{Ed}}}{V_{\text{w,Rd}}} = \frac{8}{853} = 0.01 < 1.0$$

Therefore the design resistance of the weld with a leg length of 6 mm and throat thickness of 4.2 mm is satisfactory. (In this example, the critical verification for the weld is the resistance to tying, see Section 16.10.4.)

16.10 Tying resistance

BS EN 1993-1-8 does not give any guidance on tying resistance of connections. Therefore, the guidance given in the NCCI Access Steel document SN015 is used to determine the tying resistance of the end plate.

As large strains and large deformations are associated with tying resistance failure modes, SN015 recommends that ultimate tensile strengths (f_{u}) be used and the partial factor for tying $\gamma_{\text{M,u}}$ be taken as 1.1. — Access-steel document SN015

Bearing column splice material should be able to transmit 25% of the maximum compressive force (N_{Ed}). Generally this force will be less than the accidental tying force. Here: 6.2.7(14)

25% of N_{Ed} is 25% of 1767 = 442 kN

and for tying N_{Ed} = 460 kN Sheet 3

As 442 kN < 460 kN the tying resistance verifications are critical so the 25% verification does not need to be verified in this case.

16.10.1 Bolts in tension

Verify that:

$$\frac{N_{Ed}}{N_{Rd}} < 1.0$$

The tensile resistance of a single bolt is:

$$F_{t,Rd} = \frac{k_2 f_{ub} A_s}{\gamma_{M,u}}$$

As the bolts are not countersunk k_2 = 0.9

$$F_{t,Rd} = \frac{k_2 f_{ub} A_s}{\gamma_{M,u}} = \frac{0.9 \times 800 \times 245}{1.1} \times 10^{-3} = 160 \text{ kN}$$

Therefore, the tension resistance of all the bolts in the splice is:

$$N_{Rd} = 4 \times 160 = 640 \text{ kN}$$

$$\frac{N_{Ed}}{N_{Rd}} = \frac{460}{640} = 0.72 < 1.0$$

Therefore, the tension resistance of the group of bolts is adequate.

16.10.2 Punching failure of bolts

The punching shear failure for a single bolt is:

$$B_{p,Rd} = \frac{0.6 \pi d_m t_p f_u}{\gamma_{M2}}$$ Table 3.4

Here γ_{M2} must be replaced with $\gamma_{M,u}$ as this verification considers the tying force resistance, thus,

$$B_{p,Rd} = \frac{0.6 \pi d_m t_p f_u}{\gamma_{M,u}}$$

d_m is the mean of the 'across points' and 'across flats' dimensions of the bolt head or nut, whichever is the smaller. 1.5(1)

The dimensions of the nut are the same as the head of the bolt, therefore determine d_m for the bolt head only.

$$d_m = \frac{e + s}{2}$$

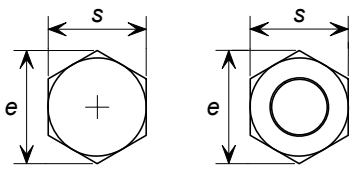

Figure 16.3

For an M20 bolt: P358

e = 30.0 mm

s = 34.6 mm

Therefore,

$$d_m = \frac{30 + 34.6}{2} = 32.3 \text{ mm}$$

$$B_{p,Rd} = \frac{0.6 \times \pi \times 32.3 \times 16 \times 410}{1.1} \times 10^{-3} = 363 \text{ kN}$$ Table 3.4

Therefore, for the group of four bolts, the punching shear failure is:

4 × 363 = 1452 kN

$$\frac{N_{Ed}}{4B_{p,Rd}} = \frac{460}{1452} = 0.32 < 1.0$$

Therefore, the resistance of the division plate to punching failure for four bolts is adequate.

16.10.3 Cap and base plates in bending

The cap and base plate resistances should both be verified. However, when the cap and base plates have the same dimensions and the lower column has a thicker web than the upper column, the base plate is the critical case.

The approach used for the end plate (Example 14) is used here for the base plate alone as this is the critical case.

An equivalent T-stub is used to represent the base plate in bending. The resistance of the base plate in bending ($N_{Rd,u,2}$) is taken as the minimum value for the resistance to Mode 1 failure (complete yielding of the base plate) or Mode 2 failure (bolt failure with yielding of the base plate) failure.

Access Steel document SN015

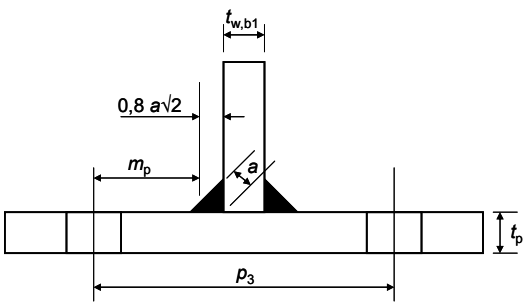

$N_{Rd,u,2}$ is the lesser value of $F_{T,1,Rd}$ (Mode 1 failure) and $F_{T,2,Rd}$ (Mode 2 failure).

Mode 1 failure

Access Steel document SN015

$$F_{T,1,Rd} = \frac{(8n_p - 2e_w)M_{pl,1,Rd,u}}{2m_p n_p - e_w(m_p + n_p)}$$

where:

$$e_w = \frac{d_w}{4}$$

d_w is the diameter of the washer or width across the points of the bolt or nut

$d_w = 37$ mm

$$e_w = \frac{37}{4} = 9.25 \text{ mm}$$

n_p is the least value of e_2; $e_{2,c}$; $1.25m_p$.

$e_2 = 94.0$ mm

$e_{2,c}$ is not applicable in this example as the two plates have the same dimensions.

Access Steel document SN015

$$m_p = \frac{\left[p_3 - t_{w,b1} - \left(2 \times 0.8 \times a \times \sqrt{2}\right)\right]}{2}$$

$p_3 = p_2 = 120.0$ mm

$t_{w,b1} = t_{w,uc} = 8.6$ mm

$$m_p = \frac{\left[120 - 8.6 - \left(2 \times 0.8 \times 4.2 \times \sqrt{2}\right)\right]}{2} = 50.95 \text{ mm}$$

$1.25m_p = 1.25 \times 50.95 = 63.68$ mm

63.68 mm < 94.0 mm

Therefore, $n_p = 63.68$ mm

Based on Table 6.2

$$M_{pl,1,Rd,u} = \frac{1}{4}\frac{\sum l_{eff,1} t_p^2 f_{u,p}}{\gamma_{M,u}} \text{ kNm}$$

where:

$\sum l_{eff,1}$ is the effective length for Mode 1 and may be determined by following the method given in SCI P358 or conservatively may be taken as $\sum l_{eff,1} = h_p$.

Take $\sum l_{eff,1} = h_p$ thus,

$$M_{pl,1,Rd,u} = \frac{1}{4}\frac{h_p t_p^2 f_{u,p}}{\gamma_{M,u}} = \frac{1}{4} \times \left(\frac{314.5 \times 16^2 \times 410}{1.1}\right) \times 10^{-6} = 7.5 \text{ kNm}$$

Therefore,

$$F_{T,1,Rd} = \frac{\left[(8 \times 63.68) - (2 \times 9.25)\right] \times 7.5 \times 10^3}{(2 \times 50.95 \times 63.68) - \left[9.25 \times \left(50.95 + 63.68\right)\right]} = 678 \text{ kN}$$

Mode 2 failure

Access Steel document SN015

$$F_{T,2,Rd} = \frac{2M_{pl,2,Rd,u} + n_p \sum F_{t,Rd,u}}{m_p + n_p}$$

where:

$$\sum F_{t,Rd,u} = nF_{t,Rd,u}$$

Access Steel document SN015

$$F_{t,Rd,u} = \frac{k_2 f_{ub} A_s}{\gamma_{M,u}} \quad \text{where } k_2 = 0.9$$

$$F_{t,Rd,u} = \frac{0.9 \times 800 \times 245}{1.1} \times 10^{-3} = 160.4 \text{ kN}$$

$$\sum F_{t,Rd,u} = nF_{t,Rd,u} = 4 \times 160.4 = 641.6 \text{ kN}$$

Table 6.2

$$M_{pl,2,Rd,u} = \frac{1}{4} \frac{\sum l_{eff,2} t_p^2 f_{u,p}}{\gamma_{M,u}}$$

where:

$\sum l_{eff,2}$ is the effective length for Mode 2 and may be determined by following the method given in SCI P358 or conservatively may be take as $\sum l_{eff,2} = h_p$. Thus,

$$M_{pl,2,Rd,u} = M_{pl,1,Rd,u} = 7.28 \text{ kNm}$$

Therefore,

$$F_{T,2,Rd} = \frac{(2 \times 7.5 \times 10^6) + (63.68 \times 641.6 \times 10^3)}{(50.95 + 63.68) \times 10^3} = 487 \text{ kN}$$

487 kN < 678 kN

Therefore the resistance of the division plate in bending is the Mode 2 failure value $F_{T,2,Rd}$

$N_{Rd,u,2} =$ 487 kN

$$\frac{N_{Ed}}{N_{Rd,u,2}} = \frac{460}{487} = 0.94 < 1.0$$

Therefore, the resistance of the division plate in bending is adequate.

16.10.4 Welds in tension

Verify that:

$$\frac{N_{Ed}}{N_{w,Rd}} \leq 1$$

Sheet 7

$$N_{w,Rd} = F_{w,Rd} \times l = 957 \times 910 \times 10^{-3} = 853 \text{ kN}$$

$$\frac{N_{Ed}}{N_{w,Rd}} = \frac{460}{853} = 0.53 < 1$$

Therefore the design resistance of the weld with a leg length of 6 mm and throat thickness of 4.2 mm is adequate.

17 Column splice – Non bearing

References are to BS EN 1993-1-8: 2005, including its National Annex, unless otherwise stated.

17.1 Scope

Verify the adequacy of a non bearing column splice that connects a 203 × 203 × 60 UKC (upper section) to a 254 × 254 × 89 UKC (lower section).

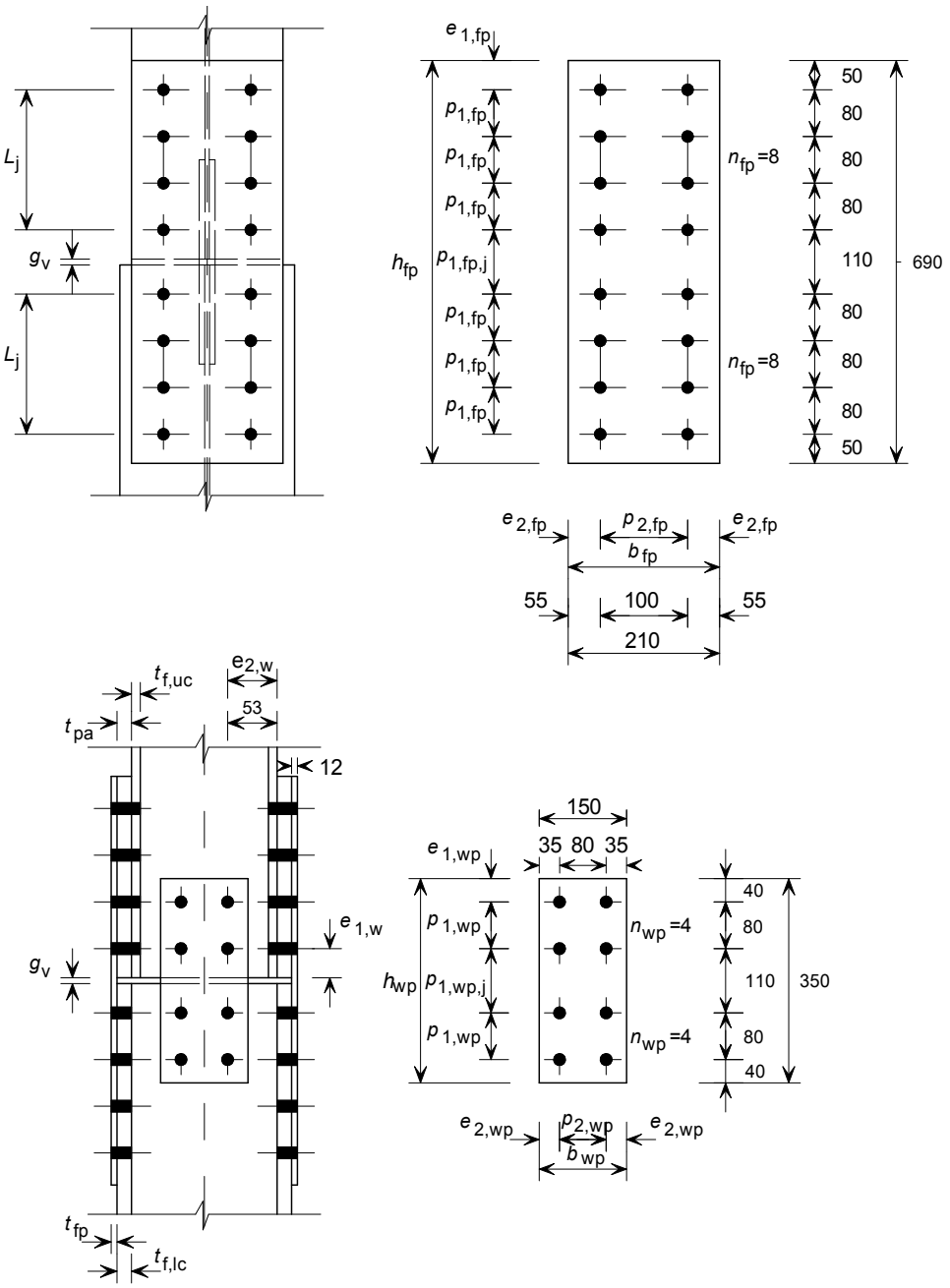

Figure 17.1

The design aspects covered in this example are:

- Calculation of forces for connection component verification
- Resistance of the splice
  - Flange cover plates
  - Flange cover plate bolt group
  - Web cover plates
  - Web cover plate bolt group
  - Upper column web bolt group.

17.2 Joint details and section properties

Upper column

203 × 203 × 60 UKC in S355 steel

Depth	h_{uc}	= 209.6 mm	P363
Width	b_{uc}	= 205.8 mm	
Thickness of the web	$t_{w,uc}$	= 9.4 mm	
Thickness of the flange	$t_{f,uc}$	= 14.2 mm	
Root radius	r_{uc}	= 10.2 mm	
Area	A_{uc}	= 76.4 cm^2	

Area of flange

$$A_{f,uc} = b_{uc}\, t_{f,uc} = 205.8 \times 14.2 = 29.22 \text{ cm}^2$$

Area of web

$$A_{w,uc} = A_{uc} - 2\,A_{f,uc} = 76.4 - 29.22 = 17.96 \text{ cm}^2$$

For S355 steel — BS EN 10025-2 Table 7

Yield strength ($t \le 16$ mm)	$f_{y,uc} = R_{eH}$	= 355 N/mm^2
Ultimate tensile strength (3 mm $\le t \le$ 100 mm)	$f_{u,uc} = R_m$	= 470 N/mm^2

In the direction of load transfer (1)

End of upper column to first bolt row on column web	$e_{1,w}$	= 50 mm
Pitch between bolt rows on column web	$p_{1,w} = p_{1,wp}$	= 80 mm

In the direction perpendicular to load transfer (2)

Edge of upper column to first bolt line on the column web	$e_{2,w}$	= 53 mm
Pitch between bolt lines on column web	$p_{2,w} = p_{2,wp}$	= 80 mm

Lower column

254 × 254 × 89 UKC in S355 steel

Depth	h_{lc}	= 260.3 mm	P363
Width	b_{lc}	= 256.3 mm	
Thickness of the web	$t_{w,lc}$	= 10.3 mm	
Thickness of the flange	$t_{f,lc}$	= 17.3 mm	
Root radius	r_{lc}	= 12.7 mm	

For S355 steel
Yield strength (16 mm $< t \leq$ 40 mm) $f_{y,lc} = R_{eH} = 345$ N/mm^2
Ultimate tensile strength (3 mm $\leq t \leq$ 100 mm) $f_{u,lc} = R_m = 470$ N/mm^2

BS EN 10025-2 Table 7

The width and thickness guidance for the flange and web cover plates given in the Access Steel NCCI document SN024 has been followed for this example.

The edge, end and spacing dimensions comply with the maximum and minimum values given in Table 3.3 of BS EN 1993-1-8:2005.

Vertical gap between column ends $g_v = 10$ mm

Flange cover plates

210 × 690 × 12 in S355 steel

Height $h_{fp} = 690$ mm
Width $b_{fp} = 210$ mm
Thickness $t_{fp} = 12$ mm

For buildings that will be built in the UK, the nominal values of the yield strength (f_y) and the ultimate strength (f_u) for structural steel should be those obtained from the product standard. Where a range is given, the lowest nominal value should be used.

BS EN 1993-1-1 NA.2.4

For S355 steel
Yield strength ($t \leq$ 16 mm) $f_{y,fp} = R_{eH} = 355$ N/mm^2
Ultimate tensile strength (3 mm $\leq t \leq$ 100 mm) $f_{u,fp} = R_m = 470$ N/mm^2

BS EN 10025-2 Table 7

Number of bolts between one flange cover plate and upper column $n_{fp} = 8$

Direction of load transfer (1)
Plate edge to first bolt row $e_{1,fp} = 50$ mm
Pitch between bolt rows $p_{1,fp} = 80$ mm
Pitch between bolt rows (across joint) $p_{1,fp,j} = 110$ mm

Direction perpendicular to load transfer (2)
Plate edge to first bolt line $e_{2,fp} = 55$ mm
Pitch between bolt lines $p_{2,fp} = 100$ mm

Flange packs

340 × 210 × 25 in S355 steel

Depth $h_{pa} = 340$ mm
Width $b_{pa} = 210$ mm
Thickness $t_{pa} = 25$ mm

Web cover plates

350 × 150 × 8 in S355 steel

Height $h_{wp} = 350$ mm
Width $b_{wp} = 150$ mm
Thickness $t_{wp} = 8$ mm

For S275 steel — BS EN 10025-2 Table 7

Yield strength ($t \leq 16$ mm) $f_{y,wp} = R_{eH} = 355$ N/mm^2

Ultimate tensile strength (3 mm $\leq t \leq$ 100 mm) $f_{u,wp} = R_m = 470$ N/mm^2

Number of bolts between web cover plate and upper column $n_{wp} = 4$

In the direction of load transfer (1)

Plate edge to first bolt row $e_{1,wp} = 40$ mm

Pitch between bolt rows $p_{1,wp} = 80$ mm

Pitch between bolt rows (across joint) $p_{1,wp,j} = 110$ mm

In the direction perpendicular to load transfer (2)

Plate edge to first bolt line $e_{2,wp} = 35$ mm

Pitch between bolt lines $p_{2,wp} = 80$ mm

Web packs

When the connected members have significantly different web thicknesses, web packs should be provided. Here the difference is only 1 mm; therefore web packs are not required.

Bolts

M24 Class 8.8

Tensile stress area $A_s = 353$ mm^2 — P363 C-306

Diameter of the shank $d = 24$ mm

Diameter of the holes $d_0 = 26$ mm

Yield strength $f_{yb} = 640$ N/mm^2 — Table 3.1

Ultimate tensile strength $f_{ub} = 800$ N/mm^2

17.2.2 Connection category

The bolted connection uses non-preloaded bolts i.e. Category A: Bearing type bolted connection. — 3.4.1(1)

17.3 Design forces at ULS

Design actions are taken from Example 16

For persistent and transient design situations

Design compression force due to permanent load $N_{Ed,G} = 825$ kN

Design compression force due to variable load $N_{Ed,Q} = 942$ kN

Total design compression force $N_{Ed} = 1767$ kN

Design bending moment (due to permanent and variable loads) $M_{Ed} = 15$ kNm

Shear force (due to permanent and variable loads) $V_{Ed} = 8$ kN

For accidental design situations (tying resistance)

Design tension force $N_{Ed} = 460$ kN

17.3.1 Design axial forces on flange cover plates

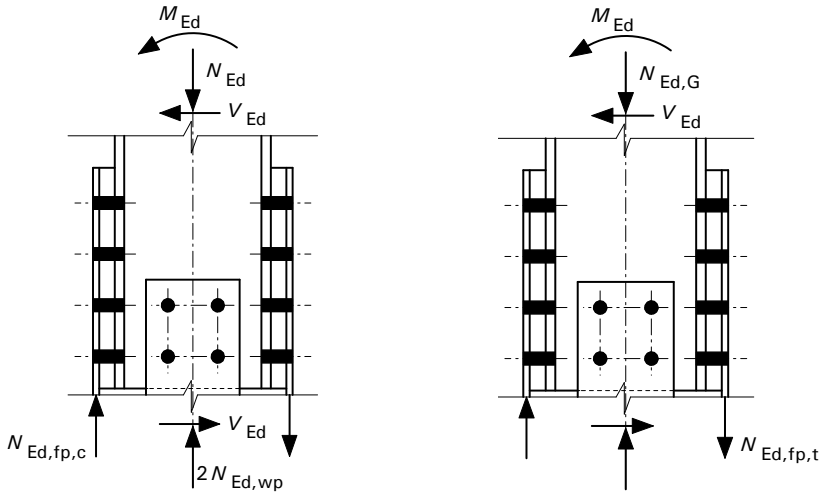

Maximum compression force Maximum tension force

Maximum design compression force in the flange cover plate ($N_{fp,Ed}$)

$$N_{fp,Ed} = \frac{M_{Ed}}{h_{uc}} + N_{Ed}\left(\frac{A_{f,uc}}{A_{uc}}\right)$$

$$N_{fp,Ed} = \frac{15}{209.6 \times 10^{-3}} + 1767 \times \left(\frac{29.22}{76.4}\right) = 747.4 \text{ kN}$$

Maximum design tension force in the flange cover plate ($N_{Ed,fp,t}$)

$$N_{fp,t,Ed} = \frac{M_{Ed}}{h_{uc}} - N_{Ed,G}\left(\frac{A_{f,uc}}{A_{uc}}\right)$$

$$N_{fp,t,Ed} = \frac{15}{209.6 \times 10^{-3}} - 825 \times \left(\frac{29.22}{76.4}\right) = -244.0 \text{ kN}$$

As the above equation gives a negative value, there is **no** tension in the flange cover plates. Therefore the resistance of the flange cover plates to tension does not need to be considered for this example, except in tying.

17.3.2 Design forces on web cover plates

The compression force on one web cover plate may be determined as

$$N_{wp,Ed} = \frac{N_{Ed}}{2} \times \frac{A_{w,uc}}{A_{uc}}$$

$$N_{wp,Ed} = \frac{1767}{2} \times \frac{17.96}{76.4} = 207.7 \text{ kN}$$

17.3.3 Design force in the upper column web

$$N_{w,uc,Ed} = 2N_{wp,Ed} = 2 \times 207.7 = 415.4 \text{ kN}$$

17.4 Partial factors for resistance

17.4.1 Structural steel

$\gamma_{M1} = 1.0$ — BS EN 1993-1-1 NA.2.15

For the bearing resistance of plates

$\gamma_{M2} = 1.25$ — Table NA.1

17.4.2 Bolts

$\gamma_{M2} = 1.25$ — Table NA.1

17.5 Resistance of connection

17.5.1 Flange cover plates

The design resistance of the flange cover plates in compression ($N_{Rd,fp,c}$) may be determined from BS EN 1993-1-1.

Local buckling between the bolts need not be considered if, — Note 2 Table 3.3

$$\frac{p_{1,fp,j}}{t_{fp}} \leq 9\varepsilon$$

$\varepsilon = 0.81$ — Sheet 6

$9\varepsilon = 7.29$ — Sheet 6

$$\frac{p_{1,fp,j}}{t_{fp}} = \frac{110}{12} = 9.2 > 7.29$$

Therefore the buckling of the flange plate between the bolts must be considered.

Verify,

$$\frac{N_{fp,Ed}}{N_{fp,b,Rd}} \leq 1.0$$

$$N_{fp,b,Rd} = \frac{\chi A_{fp} f_{y,fp}}{\gamma_{M1}}$$ — BS EN 1993-1-1 6.3.1.1(3)

$$A_{fp} = b_{fp} t_{fp} = 210 \times 12 = 2520 \text{ mm}^2$$

$$\chi = \frac{1}{\Phi + \sqrt{(\Phi^2 - \bar{\lambda}^2)}} \leq 1.0$$ — BS EN 1993-1-1 Eq (6.49)

where:

$$\Phi = 0.5 + \left(1 + \alpha\left(\bar{\lambda} - 0.2\right) + \bar{\lambda}^2\right)$$

$\bar{\lambda}$ is the slenderness for flexural buckling

$$\bar{\lambda} = \sqrt{\frac{Af_y}{N_{cr}}} = \left(\frac{L_{cr}}{i}\right)\left(\frac{1}{\lambda_1}\right)$$ (For Class 1, 2 and 3 cross-sections) — BS EN 1993-1-1 6.3.1.3(1) Eq (6.50)

$L_{cr} = 0.6p_{1,fp,j}$ — Note 2 to Table 3.3

$L_{cr} = 0.6 \times 110 = 66$ mm

$\lambda_1 = 93.9\varepsilon$

$$\varepsilon = \sqrt{\frac{235}{f_{y,fp}}} = \sqrt{\frac{235}{355}} = 0.81$$

$\lambda_1 = 93.9 \times 0.81 = 76.06$

Slenderness for buckling about the minor axis (z-z)

$$i_z = \frac{t_{fp}}{\sqrt{12}} = \frac{12}{\sqrt{12}} = 3.46 \text{ mm}$$

$$\bar{\lambda}_z = \left(\frac{L_{cr}}{i_z}\right)\left(\frac{1}{\lambda_1}\right) = \left(\frac{66}{3.46}\right)\left(\frac{1}{76.06}\right) = 0.25$$ — BS EN 1993-1-1 Eq (6.50)

For a solid section in S355 steel use buckling curve *'c'* — BS EN 1993-1-1 Table 6.2

For buckling curve *'c'* the imperfection factor is $\alpha = 0.49$ — BS EN 1993-1-1 Table 6.1

$$\Phi = 0.5\left[1 + \alpha\left(\bar{\lambda}_z - 0.2\right) + \bar{\lambda}_z^2\right]$$ — BS EN 1993-1-1 6.3.1.2(1)

$$= 0.5 \times \left[1 + 0.49 \times \left(0.25 - 0.2\right) + 0.25^2\right] = 0.54$$

$$\chi = \frac{1}{\Phi + \sqrt{(\Phi^2 - \bar{\lambda}_z^2)}} = \frac{1}{0.54 + \sqrt{(0.54^2 - 0.25^2)}} = 0.98$$ — BS EN 1993-1-1 Eq (6.49)

$0.98 < 1.0$

Therefore,

$\chi = 0.98$

Therefore,

$$N_{fp,b,Rd} = \frac{\chi A_{fp} f_{y,fp}}{\gamma_{M1}} = \frac{0.98 \times 2520 \times 355}{1.0} \times 10^{-3} = 877 \text{ kN}$$

$$\frac{N_{fp,Ed}}{N_{fp,b,Rd}} = \frac{747.4}{877} = 0.85 < 1.0$$

Therefore the design resistance of the flange plate is adequate.

17.5.2 Flange cover plate bolt group

The design resistance of the bolt group $(V_{Rd,fp})$ is — 3.7(1)

$V_{fp,Rd} = \sum F_{b,Rd}$ if $F_{v,Rd} \geq \left(F_{b,Rd}\right)_{max}$

$V_{fp,Rd} = n_{fp}(F_{b,Rd})_{min}$ if $(F_{b,Rd})_{min} \leq F_{v,Rd} < (F_{b,Rd})_{max}$

$V_{fp,Rd} = n_{fp}F_{v,Rd}$ if $\left(F_{b,Rd}\right)_{min} > F_{v,Rd}$

where:

$F_{b,Rd}$ is the design bearing resistance of a single bolt

$F_{v,Rd}$ is the design shear resistance of a single bolt.

Bearing resistance of a single bolt

The design bearing resistance of a single bolt in the flange cover plate ($F_{b,Rd}$) is given by: Table 3.4

$$F_{b,Rd} = \frac{k_1 \alpha_b f_{u,p} d\, t_{fp}}{\gamma_{M2}}$$

In the direction of load transfer:

α_b is the least value of α_d, $\frac{f_{ub}}{f_{u,p}}$ and 1.0

For end bolts $\alpha_d = \frac{e_{1,fp}}{3d_0} = \frac{50}{3 \times 26} = 0.64$

For inner bolts $\alpha_d = \frac{p_{1,fp}}{3d_0} - \frac{1}{4} = \left(\frac{80}{3 \times 26}\right) - \left(\frac{1}{4}\right) = 0.78$

$$\frac{f_{ub}}{f_{u,fp}} = \frac{800}{470} = 1.70$$

For end bolts $0.64 < 1.0 < 1.70$ therefore, $\alpha_{b,end} = 0.64$

For inner bolts $0.78 < 1.0 < 1.70$ therefore, $\alpha_{b,inner} = 0.78$

Perpendicular to the direction of load transfer:

As there are only two vertical lines of bolts in the splice there are no inner bolts.

For edge bolts k_1 is the smaller of $2.8\frac{e_{2,fp}}{d_o} - 1.7$ or 2.5.

$$2.8\frac{e_{2,fp}}{d_o} - 1.7 = \left(\frac{2.8 \times 55}{26}\right) - 1.7 = 4.22$$

$2.5 < 4.22$

Therefore, $k_1 = 2.5$

Hence, the bearing strengths for single bolts are,

End bolts

$$F_{b,Rd,end} = (F_{b,Rd})_{min} = \frac{2.5 \times 0.64 \times 470 \times 24 \times 12}{1.25} \times 10^{-3} = 173 \text{ kN}$$

Inner bolts

$$F_{b,Rd,inner} = (F_{b,Rd})_{max} = \frac{2.5 \times 0.78 \times 470 \times 24 \times 12}{1.25} \times 10^{-3} = 211 \text{ kN}$$

Shear resistance of a single bolt

The design shear resistance of a single bolt in the flange cover plate ($F_{v,Rd}$) is given by:

$$F_{v,Rd} = \frac{\alpha_v f_{ub} A}{\gamma_{M2}}$$ Table 3.4

As the packing between the flange of the upper column and the flange cover plate is thicker than one third of the nominal diameter of the bolt plate, $F_{v,Rd}$ should be multiplied by the reduction factor β_p. 3.6.1(12)

Therefore,

$$F_{v,Rd} = \beta_p \frac{\alpha_v f_{ub} A}{\gamma_{M2}}$$

where:

$$\beta_p = \frac{9d}{8d + 3t_{fp,pa}} \text{ but } \beta \leq 1.0$$ Eq (3.3)

$$\beta_p = \frac{9 \times 24}{(8 \times 24) + (3 \times 25)} = 0.81$$

$0.81 < 1.0$ therefore $\beta_p = 0.81$

For class 8.8 bolts, Table 3.4

$\alpha_v = 0.6$

Where the shear passes through the threaded part of the bolt

$A = A_s = 353 \text{ mm}^2$

$$F_{v,Rd} = 0.81 \times \frac{0.6 \times 800 \times 353}{1.25} \times 10^{-3} = 110 \text{ kN}$$

Long joint verification

If $L_j > 15d$, a reduction factor should be applied to the bolt resistances. 3.8(1)

L_j is the joint length, here

$L_j = 3p_{1,fp} = 3 \times 80 = 240$ mm

$15d = 15 \times 24 = 360$ mm

As 240 mm < 360 mm, **no reduction** in bolt resistance is required.

Resistance of the flange plate bolt group

As, $F_{v,Rd}$ (110 kN) < $(F_{b,Rd})_{min}$ (173 kN), 3.7(1)

the resistance of the bolt group in the flange cover plate is:

$$V_{fp,Rd} = n_{fp} F_{v,Rd} = 8 \times 110 = 880 \text{ kN}$$

$$\frac{N_{fp,Ed}}{V_{fp,Rd}} = \frac{747}{880} = 0.85 < 1.0$$

Therefore the resistance of the bolt group in the flange cover plate is adequate.

Note: Here the bearing resistance of the flange plate is more critical than the bearing resistance of the column flanges, thus verifications are not required for the column flanges.

17.5.3 Web cover plate

The design resistance of the web cover plate in compression ($N_{fp,Rd}$) may be determined from BS EN1993-1-1.

Local buckling between the bolts need not be considered if, — Note 2 Table 3.3

$$\frac{p_{1,fp,j}}{t_{fp}} \leq 9\varepsilon$$

$9\varepsilon = 7.29$ — Sheet 6

$$\frac{p_{1,wp,j}}{t_{wp}} = \frac{110}{8} = 13.75 > 7.2$$

Therefore buckling of the flange plate between the bolts must be considered.

Verify,

$$\frac{N_{wp,Ed}}{N_{wp,b,Rd}} \leq 1.0$$

$$N_{wp,b,Rd} = \frac{\chi A_{fp} f_{y,wp}}{\gamma_{M1}}$$ — BS EN1993-1-1 6.3.1.1(3)

$$A_{wp} = b_{wp} t_{wp} = 150 \times 8 = 1200\,\text{mm}^2$$

$$\chi = \frac{1}{\Phi + \sqrt{(\Phi^2 - \bar{\lambda}^2)}} \leq 1.0$$ — BS EN 1993-1-1 Eq (6.49)

where:

$$\Phi = 0.5 + \left[1 + \alpha\left(\bar{\lambda} - 0.2\right) + \bar{\lambda}^2\right]$$

$\bar{\lambda}$ is the slenderness for flexural buckling

$$\bar{\lambda} = \sqrt{\frac{Af_y}{N_{cr}}} = \left(\frac{L_{cr}}{i}\right)\left(\frac{1}{\lambda_1}\right)$$ (For Class 1, 2 and 3 cross sections) — BS EN 1993-1-1 6.3.1.3(1) Eq (6.50)

As $p_{1,wp,j} = p_{1,fp,j}$ the buckling length,

$L_{cr} = 66$ mm (from Sheet 7)

As $f_{y,wp} = f_{y,fp}$, $\varepsilon = 0.81$ (from Sheet 6), thus

$\lambda_1 = 76.06$ (from Sheet 7)

Slenderness for buckling about the minor axis (z-z)

$$i_z = \frac{t_{wp}}{\sqrt{12}} = \frac{8}{\sqrt{12}} = 2.31 \text{ mm}$$

$$\bar{\lambda}_z = \left(\frac{L_{cr}}{i_z}\right)\left(\frac{1}{\lambda_1}\right) = \left(\frac{66}{2.31}\right)\left(\frac{1}{76.06}\right) = 0.38$$

BS EN 1993-1-1 Eq (6.50)

For a solid section in S355 steel, use buckling curve *'c'*

BS EN 1993-1-1 Table 6.2

For buckling curve *'c'*, the imperfection factor is $\alpha = 0.49$

BS EN 1993-1-1 Table 6.1

$$\Phi = 0.5\left[1 + \alpha\left(\bar{\lambda}_z - 0.2\right) + \bar{\lambda}_z^{\,2}\right]$$

$$= 0.5 \times \left[1 + 0.49 \times \left(0.38 - 0.2\right) + 0.38^2\right] = 0.62$$

BS EN 1993-1-1 6.3.1.2(1)

$$\chi = \frac{1}{\Phi + \sqrt{(\Phi^2 - \bar{\lambda}_z^{\,2})}} = \frac{1}{0.62 + \sqrt{(0.62^2 - 0.38^2)}} = 0.90$$

BS EN 1993-1-1 Eq (6.49)

$0.90 < 1.0$

Therefore,

$\chi = 0.90$

$$N_{wp,b,Rd} = \frac{0.9 \times 1200 \times 355}{1.0} \times 10^{-3} = 383 \text{ kN}$$

$$\frac{N_{wp,Ed}}{N_{wp,b,Rd}} = \frac{207.7}{383} = 0.54 < 1.0$$

Therefore the design resistance of the flange plate is adequate.

The web cover plates should also be verified for combined bending, shear and axial force in accordance with clause 6.2.10 or 6.2.1 (5) of BS EN 1993-1-1. However, in this case the shear force is small and the interaction is judged to be satisfactory by inspection.

17.5.4 Web cover plate bolt group

Bearing resistance of a single bolt

The design bearing resistance of a single bolt in the web cover plate ($F_{b,Rd}$) is given by:

Table 3.4

$$F_{b,Rd} = \frac{k_1 \alpha_b f_{u,p} d\, t_{fp}}{\gamma_{M2}}$$

In the direction of load transfer:

α_b is the least value of α_d, $\dfrac{f_{ub}}{f_{up}}$ and 1.0

For end bolts $\alpha_d = \dfrac{e_{1,wp}}{3d_o} = \dfrac{40}{3 \times 26} = 0.51$

For inner bolts $\alpha_d = \dfrac{p_{1,wp}}{3d_o} - \dfrac{1}{4} = \left(\dfrac{80}{3 \times 26}\right) - \left(\dfrac{1}{4}\right) = 0.78$

$$\frac{f_{ub}}{f_{u,wp}} = \frac{800}{470} = 1.70$$

For end bolts $0.51 < 1.0 < 1.7$, therefore, $\alpha_{b,end} = 0.51$

For inner bolts $0.78 < 1.0 < 1.7$, therefore, $\alpha_{b,inner} = 0.78$

Perpendicular to the direction of load transfer:

As there are only two vertical lines of bolts in the splice, there are no inner bolts.

For edge bolts k_1 is the smaller of $2.8\frac{e_{2,wp}}{d_o} - 1.7$ or 2.5.

$$2.8\frac{e_{2,wp}}{d_o} - 1.7 = \frac{2.8 \times 35}{26} - 1.7 = 2.07$$

$2.07 < 2.5$

Therefore, $k_1 = 2.07$

The bearing strengths for single bolts are:

End bolts

$$F_{b,Rd,end} = (F_{b,Rd})_{min} \frac{2.07 \times 0.51 \times 470 \times 24 \times 8}{1.25} \times 10^{-3} = 76 \text{ kN}$$

Inner bolts

$$F_{b,Rd,inner} = (F_{b,Rd})_{max} = \frac{2.07 \times 0.78 \times 470 \times 24 \times 8}{1.25} \times 10^{-3} = 117 \text{ kN}$$

Shear resistance of a single bolt

The design shear resistance of a single bolt in the web cover plate ($F_{v,Rd}$) is given by:

$$F_{v,Rd} = \frac{\alpha_v f_{ub} A}{\gamma_{M2}}$$

BS EN 1993-1-8 Table 3.4

As there is no packing between the web of the upper column and the web cover plate, the reduction factor β_p is applied to $F_{v,Rd}$. Therefore,

BS EN 1993-1-8 3.6.1(12)

$$F_{v,Rd} = \frac{0.6 \times 800 \times 353}{1.25} \times 10^{-3} = 136 \text{ kN}$$

Long joint verification

If $L_j > 15d$ a reduction factor should be applied to the bolt resistances.

3.8(1)

Here,

$p_{1,wp} = p_{1,jp}$

Therefore, **no reduction** in bolt resistance is required (see verification on Sheet 9).

Resistance of the web cover plate bolt group

As, $(F_{b,Rd})_{max}$ (117 kN) < $F_{v,Rd}$ (136 kN), 3.7(1)

the resistance of the bolt group in the web cover plate is:

$$V_{wp,Rd} = \sum F_{b,Rd} = (2 \times 76) + (2 \times 117) = 386 \text{ kN}$$

$$\frac{N_{wp,Ed}}{V_{wp,Rd}} = \frac{207.7}{386} = 0.54 < 1.0$$

Therefore the resistance of the bolt group in the web cover plate is adequate.

17.5.5 Upper column web bolt group

Bearing resistance of a single bolt

The design bearing resistance of a single bolt in the web of the upper column ($F_{b,Rd}$) is given by: Table 3.4

$$F_{b,Rd} = \frac{k_1 \alpha_b f_{u,uc} d\, t_{w,uc}}{\gamma_{M2}}$$

In the direction of load transfer:

α_b is the least value of α_d, $\frac{f_{ub}}{f_{u,uc}}$ and 1.0

For end bolts $\alpha_d = \frac{e_{1,w}}{3d_o} = \frac{50}{3 \times 26} = 0.64$

For inner bolts $\alpha_d = \frac{p_{1,w}}{3d_o} - \frac{1}{4} = \left(\frac{80}{3 \times 26}\right) - \left(\frac{1}{4}\right) = 0.78$

$$\frac{f_{ub}}{f_{u,uc}} = \frac{800}{470} = 1.70$$

For end bolts 0.64 < 1.0 < 1.7, therefore $\alpha_{b,end} = 0.64$

For inner bolts 0.78 < 1.0 < 1.7, therefore $\alpha_{b,inner} = 0.78$

Perpendicular to the direction of load transfer:

For bolts in the web it can be considered that there are no edge bolts.

For inner bolts k_1 is the smaller of $1.4\frac{p_{2,w}}{d_o} - 1.7$ or 2.5.

$$1.4\frac{p_{2,w}}{d_o} - 1.7 = \left(\frac{1.4 \times 80}{26}\right) - 1.7 = 2.61$$

2.5 < 2.61

Therefore, $k_1 = 2.5$

The bearing strengths for single bolts are:

End bolts

$$F_{b,Rd,end} = (F_{b,Rd})_{min} = \frac{2.5 \times 0.64 \times 470 \times 24 \times 9.4}{1.25} \times 10^{-3} = 136 \text{ kN}$$

Inner bolts

$$F_{b,Rd,inner} = (F_{b,Rd})_{max} = \frac{2.5 \times 0.78 \times 470 \times 24 \times 9.4}{1.25} \times 10^{-3} = 165 \text{ kN}$$

Shear resistance of a single bolt

The design shear resistance of a single bolt in the web ($F_{v,ucw,Rd}$) is

$F_{v,ucw,Rd} = 2F_{v,wp,Rd}$

$F_{v,wp,Rd} = 136$ kN — Sheet 12

$F_{v,ucw,Rd} = 2 \times 136 = 272$ kN

Note: The shear resistance is multiplied by 2 because when considering the column web there are two shear planes passing through the bolt.

Resistance of the upper column web bolt group

As, $(F_{b,Rd})_{max}$ (165 kN) $<$ $F_{v,Rd,w,uc}$ (272 kN) — 3.7(1)

the resistance of the bolt group in the upper column web is:

$$V_{ucw,Rd,} = \sum F_{b,Rd} = (2 \times 136) + (2 \times 165) = 602 \text{ kN}$$

$$\frac{N_{ucw,Ed}}{V_{ucw,Rd}} = \frac{415.4}{602} = 0.69 < 1.0$$

Therefore the resistance of the bolt group in the upper column web is adequate.

17.6 Structural integrity of the column splice

The structural integrity of the column splice (resistance to tying) should be verified. However, in the case of a non-bearing column splice this verification will not be the controlling factor because the design compression force is much greater than the design tying force. Therefore, the verification has not been included here.

18 Column splice – Non bearing (Net Tension)

References are to BS EN 1993-1-8: 2005, including its National Annex, unless otherwise stated.

18.1 Scope

Determine the resistance of the non-bearing column splice given in Example 17 when the applied forces result in the presence of net tension.

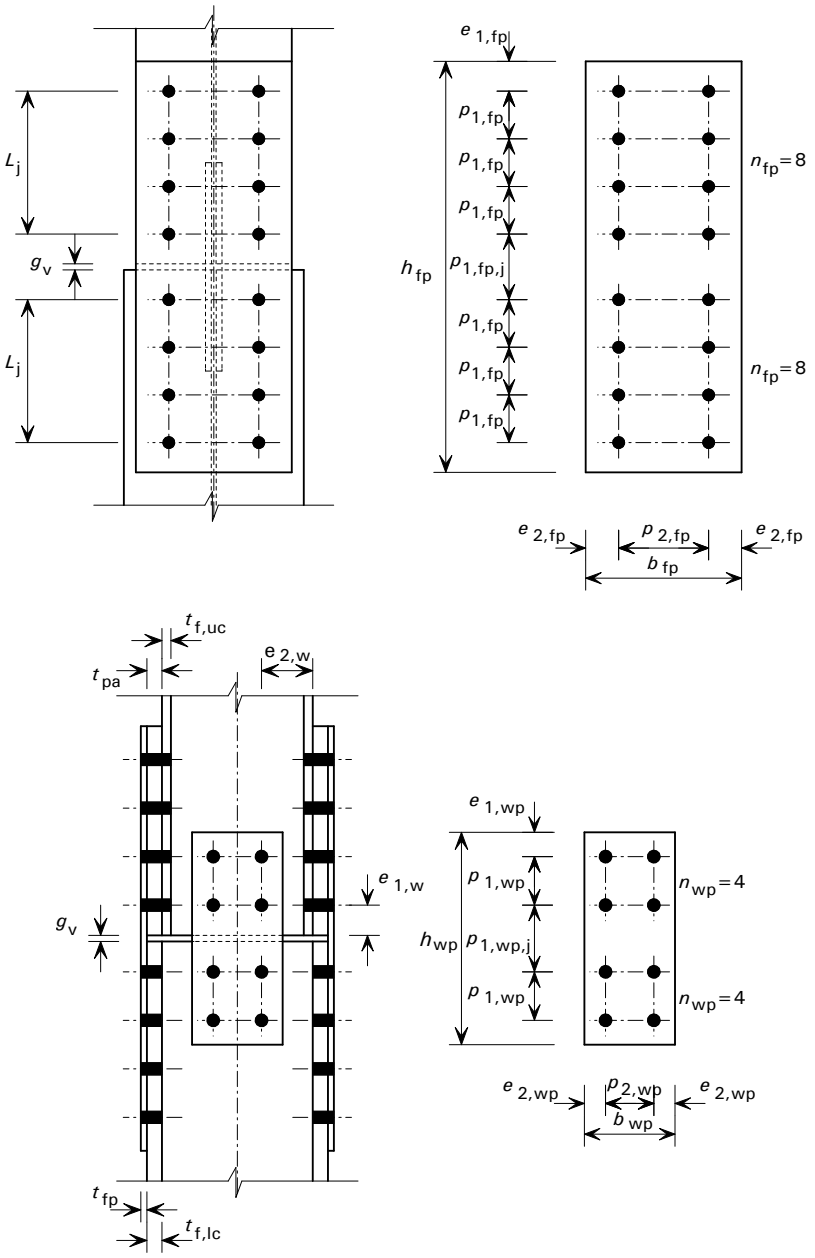

Figure 18.1

The design aspects covered in this example are:

- Resistance of the splice
  - Flange cover plates – tension
  - Flange cover plates – block tearing.

18.2 Joint data and section properties

Upper column

203 × 203 × 60 UKC in S355 steel

Depth	h_{uc}	= 209.6 mm	P363
Width	b_{uc}	= 205.8 mm	
Thickness of the web	$t_{w,uc}$	= 9.4 mm	
Thickness of the flange	$t_{f,uc}$	= 14.2 mm	
Root radius	r_{uc}	= 10.2 mm	
Area	A_{uc}	= 76.4 cm^2	

Area of flange

$$A_{f,uc} = b_{uc}\, t_{f,uc} = 205.8 \times 14.2 = 29.22 \text{ cm}^2$$

Area of web

$$A_{w,uc} = A_{uc} - 2\,A_{f,uc} = 76.4 - 29.22 = 17.96 \text{ cm}^2$$

For S355 steel — BS EN 10025-2 Table 7

Yield strength ($t \le 16$ mm) $f_{y,uc} = R_{eH} = 355$ N/mm^2

Ultimate tensile strength (3 mm $\le t \le$ 100 mm) $f_{u,uc} = R_m = 470$ N/mm^2

In the direction of load transfer (1)

End of upper column to first bolt row on column web $e_{1,w} = 50$ mm

Pitch between bolt rows on column web $p_{1,w} = p_{1,wp} = 80$ mm

In the direction perpendicular to load transfer (2)

Pitch between bolt lines on column web $p_{2,w} = p_{2,wp} = 80$ mm

Edge of upper column to first bolt line on the column web $e_{2,w} = 53$ mm

Lower column

254 × 254 × 89 UKC in S355 steel

Depth	h_{lc}	= 260.3 mm	P363
Width	b_{lc}	= 256.3 mm	
Thickness of the web	$t_{w,lc}$	= 10.3 mm	
Thickness of the flange	$t_{f,lc}$	= 17.3 mm	
Root radius	r_{lc}	= 12.7 mm	

For S355 steel — BS EN 10025-2 Table 7

Yield strength (16 mm $< t \le$ 40 mm) $f_{y,lc} = R_{eH} = 345$ N/mm^2

Ultimate tensile strength (3 mm $\le t \le$ 100 mm) $f_{u,lc} = R_m = 470$ N/mm^2

The width and thickness guidance for the flange and web cover plates given in the Access Steel NCCI document SN024 has been followed for this example.

The edge, end and spacing dimensions comply with the maximum and minimum values given in Table 3.3 of BS EN1993-1-8:2005.

Vertical gap between column ends g_v = 10 mm

Flange cover plates

210 × 690 × 12 in S355 steel

Height h_{fp} = 690 mm
Width b_{fp} = 210 mm
Thickness t_{fp} = 12 mm

For buildings that will be built in the UK, the nominal values of the yield strength (f_y) and the ultimate strength (f_u) for structural steel should be those obtained from the product standard. Where a range is given, the lowest nominal value should be used.

BS EN 1993-1-1 NA.2.4

For S355 steel

BS EN 10025-2 Table 7

Yield strength ($t \leq 16$ mm) $f_{y,fp} = R_{eH} = 355$ N/mm^2
Ultimate tensile strength (3 mm $\leq t \leq$ 100 mm) $f_{u,fp} = R_m = 470$ N/mm^2

Number of bolts between one flange cover plate and upper column $n_{fp} = 8$

Direction of load transfer (1)

Plate edge to first bolt row $e_{1,fp}$ = 50 mm
Pitch between bolt rows $p_{1,fp}$ = 80 mm
Pitch between bolt rows (across joint) $p_{1,fp,j}$ = 110 mm

Direction perpendicular to load transfer (2)

Plate edge to first bolt line $e_{2,fp}$ = 55 mm
Pitch between bolt lines $p_{2,fp}$ = 100 mm

Flange packs

340 × 210 × 25 in S355 steel

Depth $h_{fp,pa}$ = 340 mm
Width $b_{fp,pa}$ = 210 mm
Thickness $t_{fp,pa}$ = 25 mm

Web cover plates

350 × 150 × 8 in S355 steel

Height h_{wp} = 350 mm
Width b_{wp} = 150 mm
Thickness t_{wp} = 8 mm

For S275 steel

BS EN 10025-2 Table 7

Yield strength ($t \leq 16$ mm) $f_{y,wp} = R_{eH} = 355$ N/mm^2
Ultimate tensile strength (3 mm $\leq t \leq$ 100 mm) $f_{u,wp} = R_m = 470$ N/mm^2

Number of bolts between web cover plate and upper column $n_{wp} = 4$

In the direction of load transfer (1)

Plate edge to first bolt row $e_{1,wp}$ = 40 mm
Pitch between bolt rows $p_{1,wp}$ = 80 mm
Pitch between bolt rows (across joint) $p_{1,wp,j}$ = 110 mm

In the direction perpendicular to load transfer (2)

Plate edge to first bolt line $e_{2,wp}$ = 35 mm
Pitch between bolt lines $p_{2,wp}$ = 80 mm

Web packs

170 × 150 × 0.5 in S355 steel

Depth $h_{wp,pa}$ = 170 mm
Width $b_{wp,pa}$ = 150 mm
Thickness $t_{wp,pa}$ = 0.5 mm

Bolts

M24 Class 8.8

Tensile stress area A_s = 353 mm^2 — P363 C-306
Diameter of the shank d = 24 mm
Diameter of the holes d_0 = 26 mm

Yield strength f_{yb} = 640 N/mm^2 — Table 3.1
Ultimate tensile strength f_{ub} = 800 N/mm^2

18.2.2 Connection category

The bolted connection uses non-preloaded bolts i.e. Category A: Bearing type bolted connection. — 3.4.1(1)

18.3 Partial factors for resistance

18.3.1 Structural steel

γ_{M0} = 1.0 — BS EN 1993-1-1 NA.2.15

γ_{M2} = 1.1

18.4 Resistance of the connection

For completeness, the design verifications given below should be carried out in addition to the tension and block tearing verifications given in this example. See Example 17 for the following verifications.

- Flange cover plates – maximum compression
- Flange cover plate bolt group
- Web cover plate
- Web cover plate bolt group
- Upper column web bolt group

18.4.1 Flange cover plates – tension resistance

The design resistance in tension ($N_{t,Rd}$) is the lesser of: — BS EN 1993-1-1 6.2.3(2)

$$N_{pl,Rd} = \frac{Af_y}{\gamma_{M0}} \text{ and } N_{u,Rd} = \frac{0.9A_{net}f_u}{\gamma_{M2}}$$

$$A = b_{fp}t_{fp} = 210 \times 12 = 2520 \text{ mm}^2$$

$$N_{\text{pl,Rd}} = \frac{2520 \times 355}{1.0} \times 10^{-3} = 895 \text{ kN}$$

As the bolt holes are not staggered the net area (A_{net}) is determined as — BS EN 1993-1-1 6.2.2.2(3)

$$A_{\text{net}} = A - 2 d_0 t_{\text{fp}} = 2520 - (2 \times 26 \times 12) = 1896 \text{ mm}^2$$

$$N_{\text{u,Rd}} = \frac{0.9 \times 1896 \times 470}{1.1} \times 10^{-3} = 729 \text{ kN}$$ — BS EN 1993-1-1 6.2.3(2)

729 kN < 895 kN

Therefore, the design resistance in tension is

$$N_{\text{t,Rd}} = N_{\text{u,Rd}} = 729 \text{ kN}$$

18.4.2 Flange cover plates – Block tearing

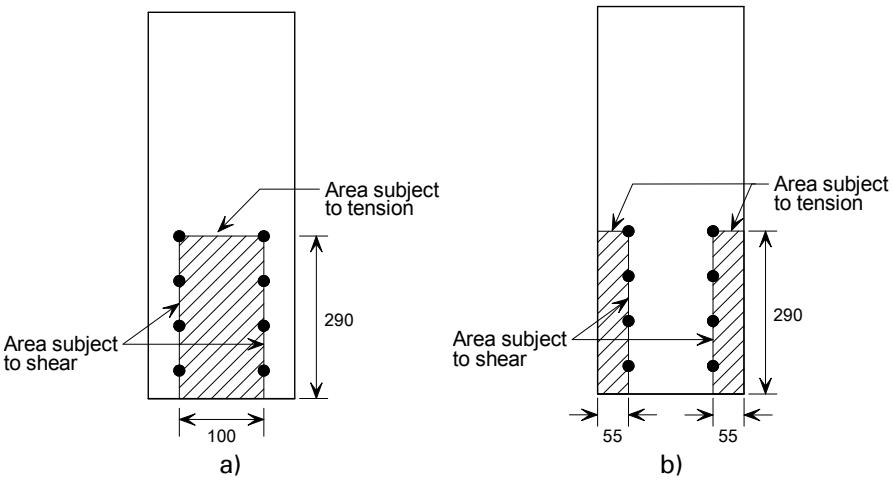

Figure 18.2

In this example $p_2 < 2e_2$; therefore the block tearing failure area shown in Figure 18.2 a) should be considered. However, if $p_2 > 2e_2$ the block tearing failure area shown in Figure 18.2 b) should be considered.

For symmetrical bolt groups subject to a concentric load, the design block tearing resistance is: — 3.10.2(2)

$$V_{\text{eff,1,Rd}} = \frac{f_{\text{u}} A_{\text{nt}}}{\gamma_{\text{M2}}} + \frac{f_{\text{y}} A_{\text{nV}}}{\sqrt{3}\gamma_{\text{M0}}}$$ — Eq (3.9)

A_{nt} is the net area subject to tension

$$A_{\text{nt}} = (p_{2,\text{fp}} - d_0) t_{\text{fp}} = (100 - 26) \times 12 = 888 \text{ mm}^2$$

A_{nV} is the net area subject to shear

$$A_{\text{nV}} = 2(3p_{1,\text{fp}} + e_{1,\text{fp}} - 3.5d_0)t_{\text{fp}}$$

$$= 2 \times ((3 \times 80) + 50 - (3.5 \times 26)) \times 12 = 4776 \text{ mm}^2$$

Therefore, the design resistance to block tearing is

$$V_{\text{eff,1,Rd}} = \left(\frac{470 \times 888}{1.1} + \frac{355 \times 4776}{\sqrt{3} \times 1.0} \right) \times 10^{-3} = 1358 \text{ kN}$$

18.4.3 Structural integrity of the column splice

The structural integrity of the column splice (resistance to tying) should be verified. However, in the case of a non-bearing column splice this verification will not be the controlling factor because the design compression force is much greater than the design tying force. Therefore, the verification has not been included here.

Example 17 contains a verification for structural integrity.

19 Base plate – Nominally pinned

References are to BS EN 1993-1-8: 2005, including its National Annex, unless otherwise stated.

19.1 Scope

Verify the adequacy of the base plate shown in Figure 19.1.

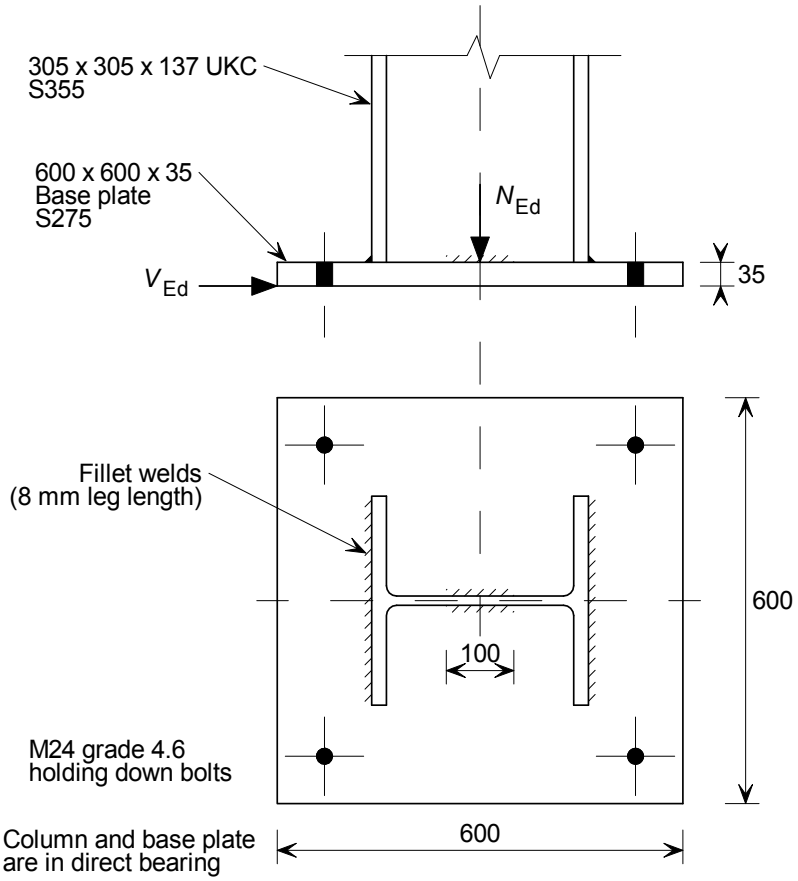

Figure 19.1

The design aspects covered in this example are:

- Resistance of joint
  - Effective area of base plate
  - Thickness of base plate verification
  - Base plate welds.

19.2 Design forces at ULS

Design compression force acting in the column N_{Ed} = 2635 kN
Design shear force V_{Ed} = 100 kN

19.3 Joint details and section properties

Column — P363

305 × 305 × 137 UKC in S355 steel

Depth	h	= 320.5 mm
Width	b	= 309.2 mm
Web thickness	t_w	= 13.8 mm
Flange thickness	t_f	= 21.7 mm
Root radius	r	= 15.2 mm
Area	A	= 174 cm^2

For buildings that will be built in the UK, the nominal values of the yield strength (f_y) and the ultimate strength (f_u) for structural steel should be those obtained from the product standard. Where a range is given, the lowest nominal value should be used. — BS EN 1993-1-1 NA.2.4

For S355 steel — BS EN 10025-2 Table 7

Yield strength (16 mm < $t \leq$ 40 mm)	f_y	= R_{eH} = 345 N/mm^2
Ultimate strength (3 mm ≤ t ≤ 100 mm)	f_u	= R_m = 470 N/mm^2

Base plate

Width	b_{bp}	= 600 mm
Length	l_{bp}	= 600 mm
Thickness	t_{bp}	= 35 mm

For S275 steel — BS EN 10025-2 Table 7

Yield strength (16 mm < $t \leq$ 40 mm)	$f_{y,bo}$	= R_{eH} = 265 N/mm^2
Ultimate strength (3 mm ≤ t ≤ 100 mm)	$f_{u,bp}$	= R_m = 410 N/mm^2

Fillet welds

Leg length		8 mm
Throat	a	= 5.7 mm

Concrete

Grade of concrete below base plate is C25/30 — BS EN 1992-1-1 Table 3.1

Characteristic cylinder strength	f_{ck}	= 25 N / mm^2
Characteristic cube strength	$f_{ck.cube}$	= 30 N / mm^2

Design compressive strength of the concrete is determined from: — BS EN 1992-1-1 3.1.6(1)

$$f_{cd} = \frac{\alpha_{cc} f_{ck}}{\gamma_c}$$

where:

α_{cc} = 0.85 (for compression)

γ_c = 1.5 (for the persistent and transient design situation) — BS EN 1992-1-1 Table NA.1

$$f_{cd} = \frac{0.85 \times 25}{1.5} = 14.2 \text{ N/mm}^2$$

BS EN 1992-1-1 3.1.6(1)

19.4 Partial factors for resistance

19.4.1 Structural steel

$\gamma_{M0} = 1.0$

BS EN 1993-1-1 NA.2.15

19.4.2 Weld

$\gamma_{M2} = 1.25$

Table NA.1

19.5 Resistance of joint

19.5.1 Effective area of base plate

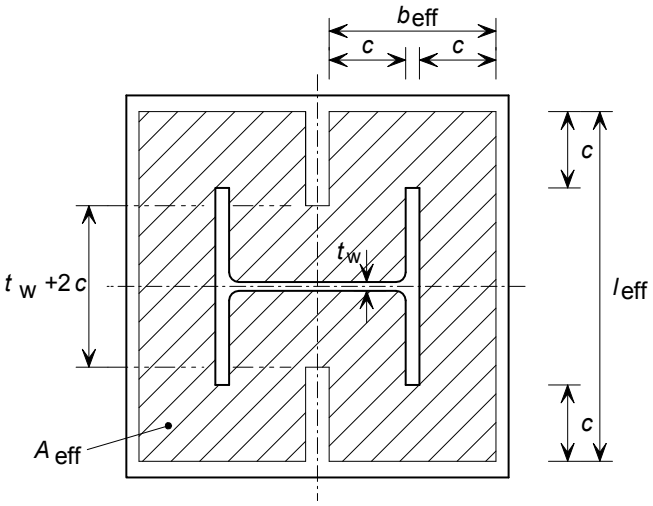

Figure 19.2

The flange of an equivalent T-stub in compression is used to represent the design resistance of the concrete in bearing. 6.2.5(1)

The design bearing strength of the joint is

$$f_{jd} = \frac{\beta_j F_{R,du}}{b_{eff}\, l_{eff}}$$

6.2.5(7) Eq (6.6)

where:

$\beta_j = 2/3$ Assuming that the characteristic strength of the grout is not less than 0.2 times the characteristic strength of the concrete foundation and the thickness of the grout is not greater than 0.2 times the smallest width of the base plate. 6.2.5(7)

b_{eff} & l_{eff} are shown in Figure 19.2

$F_{Rd,u}$ is the concentrated design resistance force given in BS EN1992, where A_{c0} is to be taken as ($b_{eff}\, l_{eff}$).

$$F_{Rd,u} = A_{c0} f_{cd} \sqrt{\left(\frac{A_{c1}}{A_{c0}}\right)} \leq 3 f_{cd} A_{c0}$$

BS EN 1992-1-1 6.7(2) Eq (6.63)

where:

$\sqrt{\frac{A_{c1}}{A_{c0}}}$ accounts for the concrete bearing strength enhancement due to diffusion of the force within the concrete.

If the foundation dimensions are not known it is reasonable to assume that in most cases the foundation size relative to the size of the base plate (see Figure 19.3) will allow. $\sqrt{\frac{A_{c1}}{A_{c0}}} = 1.5$

Note: As shown below, when $\sqrt{\frac{A_{c1}}{A_{c0}}} = 1.5$, $f_{jd} = f_{cd}$.

Guidance on the calculation of $\sqrt{\frac{A_{c1}}{A_{c0}}}$ is given in Annex A of the Access-steel document SN037a (available at www.access-steel.com).

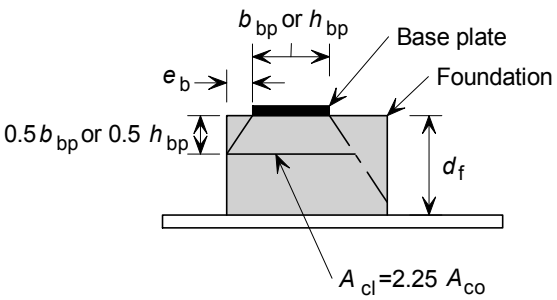

Figure 19.3

Assume that the foundation size will allow the distribution of the load as shown in Figure 19.3,

therefore, $\sqrt{\frac{A_{c1}}{A_{c0}}} = 1.5$

$$A_{c0} f_{cd} \sqrt{\left(\frac{A_{c1}}{A_{c0}}\right)} = 1.5 A_{c0} f_{cd}$$

As $1.5 A_{c0} f_{cd} < 3 f_{cd} A_{c0}$

BS EN 1992-1-1 6.7(2) Eq (6.63)

$$F_{Rd,u} = 1.5 A_{c0} f_{cd}$$

Taking $A_{c0} = b_{eff} l_{eff}$ gives,

6.2.5(7)

$$F_{Rd,u} = 1.5 b_{eff} l_{eff} f_{cd}$$

Therefore,

$$f_{jd} = \frac{\beta_j 1.5 b_{eff} l_{eff} f_{cd}}{b_{eff} l_{eff}} = 1.5 \beta_j f_{cd}$$

$$f_{jd} = 1.5 \beta_j f_{cd} = 1.5 \times \frac{2}{3} \times f_{cd} = f_{cd} = 14.2 \text{ N/mm}^2$$

6.2.5(7) Eq (6.6)

Making the design compression resistance of the joint ($F_{c.Rd}$) equal to the axial design force (N_{Ed}), the bearing area required is determined as:

$$A_{eff} = \frac{N_{Ed}}{f_{jd}} = \frac{2635 \times 10^3}{14.2} = 185600 \text{ mm}^2$$

The bearing area provided is approximately:

$4c^2 + p_{col}\,c + A$

c is defined in Figure 19.2.

A = 17400 mm^2 cross sectional area of column

p_{col} = 1820 mm perimeter of the column taken from member property tables — P363

Taking the area provided to equal the area required gives,

$4c^2 + p_{col}\,c + A = 185600$ mm^2

$4c^2 + 1820c + 17400 = 185600$ mm^2

Solving gives,

c = 79 mm

Verify that the T-stubs do not overlap for c = 79 mm

$$\frac{h - 2t_f}{2} = \frac{320.5 - (2 \times 21.7)}{2} = 139 \text{ mm}$$

As c < 139 mm, the T-stubs do not overlap, therefore no allowance for overlapping is required.

Verify that the plan size of the base plate is adequate.

Width required is $b_{eff} = h + 2c = 320.5 + (2 \times 79) = 478.5$ mm

Length required is $l_{eff} = b + 2c = 309.2 + (2 \times 79) = 467.2$ mm

As both b_{eff} and l_{eff} are less than 600 mm, the plan size is adequate.

19.5.2 Thickness of base plate

Rearranging Equation (6.5) of BS EN1993-1-8 gives the minimum thickness of the base plate.

$$t = \frac{c}{\sqrt{f_y / 3 f_{jd} \gamma_{M0}}} = \frac{79}{\sqrt{265/3 \times 14.2 \times 1}} = 31.6 \text{ mm}$$ — Based on Eq (6.5)

31.6mm < 35 mm

Therefore the 600 × 600 × 35 mm S275 base plate is adequate.

19.5.3 Base plate welds

BS EN1993-1-8 gives two methods for determining the strength of a fillet weld, the directional method (6.5.3.2) and the simplified method (6.5.3.3). Here the simplified method is used.

Verify that, $\dfrac{F_{w,Ed}}{F_{w,Rd}} \leq 1.0$

where:

$F_{w.Ed}$ Design value of the weld force per unit length

$F_{w,Rd}$ Design weld resistance per unit length — 4.5.3.3(2)

$= f_{vw,d}\, a$

a is the throat thickness of the fillet weld

= 5.7 mm (for a fillet weld with an 8 mm leg length)

$$f_{vw,d} = \frac{f_u / \sqrt{3}}{\beta_w \gamma_{M2}}$$ — Eq (4.4)

f_u is the nominal ultimate tensile strength of the weaker part jointed.

Therefore, $f_u = f_{u.bp} = 410$ N/mm^2

For S275 steel $\beta_w = 0.85$ — Table 4.1

$$f_{vw,d} = \frac{f_u / \sqrt{3}}{\beta_w \times \gamma_{M2}} = \frac{410/\sqrt{3}}{0.85 \times 1.25} = 223 \text{ N/mm}^2$$ — Eq (4.4)

$F_{w.Rd} = f_{vw.d} \times a = 223 \times 5.7 = 1271.0$ N/mm

Here, in direct bearing the weld only needs to resist the shear force.

Conservatively consider only the welds that run parallel to the applied shear.

Weld length L_w = length of weld – 2 × leg length

= 100 – (2 × 8) = 84 mm

$$F_{w,Ed} = \frac{V_{Ed}}{2L_w} = \frac{100 \times 10^3}{2 \times 84} = 595 \text{ N/mm}$$

$$\frac{F_{w,Ed}}{F_{w,Rd}} = \frac{595}{1271} = 0.47 < 1$$

Therefore an 8 mm fillet weld of 100 mm along either side of the web is adequate.

20 Base plate – Column with moment

References are to BS EN 1993-1-8: 2005, including its National Annex, unless otherwise stated.

20.1 Scope

Verify the adequacy of the base plate for the column shown in Figure 20.1, which transfers moment and axial force.

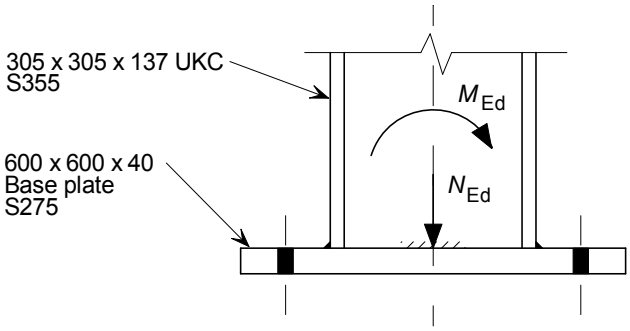

Figure 20.1

The design aspects covered in this example are:

- Resistance of the right side of joint
- Moment resistance of column base
- Verification of base plate dimensions

20.2 Design values of forces due to combined actions at ULS

The design value of compression force and bending moment are simultaneous. No other combination of actions is considered here.

Design compression force	N_{Ed}	= 1380 kN
Design bending moment	$M_{y,Ed}$	= 185 kNm

20.3 Joint details and section properties

305 × 305 × 137 UKC P363

Depth	h	= 320.5 mm
Width	b	= 309.2 mm
Web thickness	t_w	= 13.8 mm
Flange thickness	t_f	= 21.7 mm
Root radius	r	= 15.2 mm
Plastic modulus *y-y* axis	$W_{pl,y}$	= 2300 cm^3
Area	A	= 174 cm^2

For buildings that will be built in the UK, the nominal values of the yield strength (f_y) and the ultimate strength (f_u) for structural steel should be those obtained from the product standard. Where a range is given, the lowest nominal value should be used. — BS EN 1993-1-1 NA.2.4

For S355 steel — BS EN 10025-2 Table 7

Yield strength (16 mm < $t \leq$ 40 mm) $f_y = R_{eH} = 345$ N/mm^2

Ultimate strength (3 mm $\leq t \leq$ 100 mm) $f_u = R_m = 470$ N/mm^2

Base plate

Width $b_{bp} = 600$ mm

Length $l_{bp} = 600$ mm

Thickness $t_{bp} = 40$ mm

For S275 steel — BS EN 10025-2 Table 7

Yield strength (16 mm < $t \leq$ 40 mm) $f_{y,bp} = R_{eH} = 265$ N/mm^2

Ultimate strength (3 mm $\leq t \leq$ 100 mm) $f_{u,bp} = R_m = 410$ N/mm^2

Concrete

Grade of concrete below base plate is C25/30 — BS EN 1992-1-1 Table 3.1

Characteristic cylinder strength $f_{ck} = 25$ N/mm^2

Characteristic cube strength $f_{ck,cube} = 30$ N/mm^2

Design compressive strength of the concrete is determined from: — BS EN 1992-1-1 3.1.6(1)

$$f_{cd} = \frac{\alpha_{cc} f_{ck}}{\gamma_c}$$

where:

$\alpha_{cc} = 0.85$ (for compression) — BS EN 1992-1-1 Table NA.1

$\gamma_c = 1.5$ (for the persistent and transient design situation)

$$f_{cd} = \frac{0.85 \times 25}{1.5} = 14.2 \text{ N/mm}^2$$ — BS EN 1992-1-1 3.1.6(1)

20.4 Design forces on equivalent T-stubs

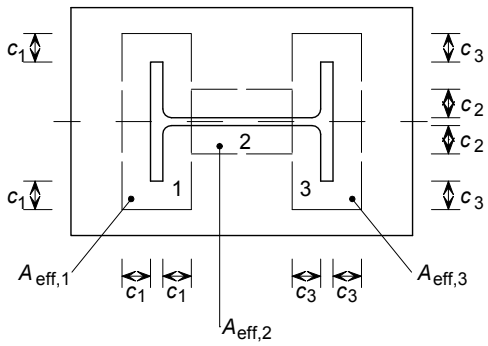

1. T-stub 1
2. T-stub 2
3. T-stub 3

Figure 20.2

The design moment resistance of a column base ($M_{j,Rd}$) subject to combined axial force and moment may be determined using the expressions given in Table 6.7 of BS EN 1993-1-8 where the contribution of the concrete under T-stub 2 to the compression resistance is neglected. — 6.2.8.3(1)

Figure 6.18

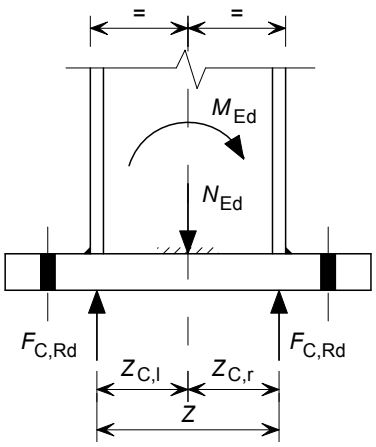

Figure 20.3

In this example, the column base connection is subject to a significant compression force. Therefore, the lever arms to be considered are as shown in Figure 20.3. 3.2.5.1(3)

$z \quad = h - t_f \;=\; 320.5 - 21.7 \;=\; 298.8$ mm

Therefore:

$$z_{C,l} \;=\; z_{C,r} \;=\; \frac{298.8}{2} \;=\; 149.4\text{mm}$$

The design forces on the T-stubs are:

Left flange (T-stub 1)

$$F_{c,l,Ed} \;=\; \frac{N_{Ed}}{2} - \frac{M_{y,Ed}}{z} \;=\; \frac{1380}{2} - \frac{185\times10^6}{298.8} \;=\; 71 \text{ kN (Compression)}$$

Right flange (T-stub 3)

$$F_{c,r,Ed} \;=\; \frac{N_{Ed}}{2} + \frac{M_{y,Ed}}{z} \;=\; \frac{1380}{2} + \frac{185\times10^6}{298.8} \;=\; 1309 \text{ kN (Compression)}$$

20.5 Partial factors for resistance

20.5.1 Structural steel

$\gamma_{M0} \quad = 1.0$ BS EN 1993-1-1 NA.2.15

20.6 Resistance of joint

As the joint is symmetrical, the resistance of the left (T-stub 1) and right sides of the joint (T-stub 3) will be equal.

Here the right side of the joint is required to resist a greater compression than the left side of the joint. Therefore, only the resistance of the right side of the joint (T-stub 3) needs to be considered.

Note: If the applied forces were such that tension occurred at T-stub 1, a separate verification for the tension resistance would be required.

20.6.1 Right side of joint (T-stub 3)

The design compression resistance $F_{C,r,Rd}$ of the right side of the joint should be taken as the smaller value of: 6.2.8.3(5)

– the concrete in compression under the right column flange $F_{c,pl,Rd}$ (6.2.6.9)

– the right column flange and web in compression $F_{c,fc,Rd}$ (6.2.6.7)

Concrete in compression under the right column flange ($F_{c,pl,Rd}$)

6.2.6.9(2) refers to 6.2.5(3) thus the resistance of the concrete under a column flange is: 6.2.6.9(2)

$F_{c,pl,Rd} = F_{C,Rd} = f_{jd}\, l_{eff}\, b_{eff}$ 6.2.5(3)

where:

f_{jd} is the design bearing strength of the joint. From the conservative approach used in Section 19.5 of Example 19,

$f_{jd} = 14.2$ N/mm^2

l_{eff}, b_{eff} are the effective length and breadth of the effective area for the equivalent T-stub flange.

The effective area that is required under T-stub 3 to resist the design compression force ($F_{c,r,Ed}$) is:

$$A_{eff,3} = \frac{F_{c,r,Ed}}{f_{jd}} = \frac{1309.1\times10^3}{14.2} = 92190 \text{ mm}^2$$

Determine the minimum value for dimension c_3 that is required to provide an adequate bearing area.

The effective area is $A_{eff,3} = 4c_3^2 + p_f c_3 + A_f$

where:

c_3 is defined in Figure 20.2.

A_f is the cross sectional area of flange

$A_f = t_f b = 21.7 \times 309.2 = 6709.6$ mm^2

p_f is the perimeter of the flange

$p_f = 2t_f + 2b = (2 \times 21.7) + (2 \times 309.2) = 661.8$ mm.

Equating the required area to the effective area

$92190 = 4c_3^2 + 661.8\, c_3 + 6709.6$

Solving,

$c_3 = 85.2$ mm

The thickness of the base plate limits the maximum cantilever, c, such that 6.2.5(4) Eq (6.5)

$$c \le t\sqrt{\frac{f_y}{3 f_{jd}\gamma_{M0}}} = 40\times\sqrt{\frac{265}{3\times14.2\times1}} = 99.8 \text{ mm}$$

85.2 mm < 99.8 mm, therefore the value of c_3 is acceptable.

The compression resistance of the concrete under the right hand flange is,

$F_{c,pl,Rd} = F_{C,Rd} = f_{jd} l_{eff,3} b_{eff,3}$ 6.2.5(3)

Where, $l_{eff,3} = b + 2c_3$ and $b_{eff,3} = t_f + 2c_3$

Here the design force ($F_{c,r,Ed}$) has been used to determine c_3, thus the compression resistance of the concrete under the right hand flange is

$F_{c,pl,Rd} = F_{c,r,Ed} = 1309$ kN

Right column flange and web in compression ($F_{c,fc,Rd}$) — 6.2.6.7

6.2.8.3(5) refers to 6.2.6.7 which gives rules for connections where the beam flange and web are in compression, thus the resistance of the right column flange and web in compression is:

$$F_{c,fc,Rd} = F_{c,fb,Rd} = \frac{M_{c,Rd}}{(h - t_{fb})}$$ — Eq (6.21)

$M_{c,Rd}$ is the design bending resistance of the column obtained from BS EN 1993-1-1.

t_{fb} is the thickness fo the beam flange, in this case $t_{fb} = t_f$

Determine whether the axial force reduces the bending resistance of the cross section. The axial force (N_{Ed}) does not need to be allowed for if both the following criteria are met, — BS EN 1993-1-1 6.2.9.1(4)

$$N_{Ed} \le 0.25N_{pl,Rd} \text{ and } N_{Ed} \le \frac{0.5h_w t_w f_y}{\gamma_{M0}}$$

$$N_{pl,Rd} = \frac{Af_y}{\gamma_{M0}} = \frac{17400 \times 345}{1.0} \times 10^{-3} = 6003 \text{ kN}$$ — BS EN 1993-1-1 6.2.4(2)

$0.25N_{pl,Rd} = 0.25 \times 6003 = 1501$ kN

$N_{Ed} < 0.25N_{pl,Rd}$ (i.e. 1380 kN < 1501 kN)

Therefore the first criterion is satisfied.

$h_w = h - 2t_f = 320.5 - 2 \times 21.7 = 277.1$ mm

$$\frac{0.5h_w t_w f_y}{\gamma_{M0}} = \frac{0.5 \times 277.1 \times 13.8 \times 345}{1.0} \times 10^{-3} = 659.6 \text{ kN}$$

$N_{Ed} > 659.6$ kN (i.e. 1380 kN > 659.6 kN)

Therefore, this criterion is not satisfied, so an allowance for the axial force on the bending moment resistance is required.

The design plastic bending resistance for the major axis is — BS EN 1993-1-1 6.2.5(2)

$$M_{pl,y,Rd} = \frac{W_{pl,y} f_y}{\gamma_{M0}} = \frac{2300 \times 10^3 \times 345}{1.0} \times 10^{-6} = 794 \text{ kNm}$$ — Eq (6.13)

Design plastic moment resistance reduced due to the effects of the axial force may be found using the following approximation

$$M_{N,y,Rd} = M_{p,,y,Rd}\left(\frac{1-n}{1-0.5\alpha}\right) \text{ but } M_{N,y,Rd} \le M_{p,,y,Rd}$$ — BS EN 1993-1-1 6.2.9.1(5)

where:

$$n = \frac{N_{Ed}}{N_{pl,Rd}} = \frac{1380}{6003} = 0.23$$

$$\alpha = \frac{A - 2bt_f}{A} = \frac{17400 - (2 \times 309.2 \times 21.7)}{17400} = 0.23$$

$$M_{N,y,Rd} = M_{pl,y,Rd}\left(\frac{1-n}{1-0.5\alpha}\right) = 794 \times \left(\frac{1-0.23}{1-(0.5 \times 0.23)}\right) = 691 \text{ kNm}$$

Therefore

$$M_{c,Rd} = M_{N,y,Rd} = 691 \text{ kNm}$$

$$F_{c,fc,Rd} = F_{c,fb,Rd} = \frac{M_{c,Rd}}{(h - t_{fb})}$$ Eq (6.21)

Therefore the bearing resistance of the concrete under the right hand column flange and web is

$$F_{c,fc,Rd} = \frac{691 \times 10^6}{(320.5 - 21.7)} \times 10^{-3} = 2313 \text{ kN}$$

Design compression resistance of the right hand side of the joint

$F_{c,pl,Rd} < F_{c,fc,Rd}$ (i.e. 1309 kN < 2313 kN)

Therefore the design compressive resistance $F_{c,r,Rd}$ of the right side of the joint is: 6.2.8.3(4)

$$F_{c,r,Rd} = F_{c,pl,Rd} = 1309 \text{ kN}$$

20.6.2 Design moment resistance of column base

$$e = \frac{M_{Ed}}{N_{Ed}}$$ Table 6.7

If the moment is clockwise M_{Ed} is positive

If the axial force is tension N_{Ed} is positive

Therefore

$M_{Ed} = 185$ kNm

$N_{Ed} = -1380$ kN

$$e = \frac{185}{-1380} \times 10^3 = -134.1 \text{ mm}$$

$z = 298.8$ mm Sheet 2

As $N_{Ed} < 0$ and $-z_{C,r} < e \leq 0$ Table 6.7

The design moment resistance of the joint $M_{j,Rd}$ is the smaller of

$$\frac{-F_{C,l,Rd} z}{z_{C,r}/e + 1} \quad \text{and} \quad \frac{-F_{C,r,Rd} z}{z_{C,l}/e - 1}$$

Here the base plate is symmetrical and the moment acts clockwise, so the second of the above expressions will result in the smaller value.

$$\frac{-F_{C,r,Rd}z}{z_{C,l}/e-1} = \frac{-1309 \times 298.8}{(149.4/-134.1)-1} \times 10^{-3} = 185 \text{ kNm}$$

Therefore the design moment resistance of the column base is

$M_{j,Rd}$ = 185.0 kNm

Design moment M_{Ed} = 185 kNm

$$\frac{M_{Ed}}{M_{j,Rd}} = \frac{185}{185} = 1.0$$

Therefore, the design moment resistance of the joint is adequate.

20.6.3 Dimensions of base plate

Plan dimensions

$l_{eff,r}$ = $b + 2c_3$ = 309.2 + (2 × 85.2) = 479.6 mm < 600 mm

b_{eff} = $h + 2c_3$ = 320.5 + (2 × 85.2) = 190.9 mm < 600 mm

Therefore a 600 × 600 base plate is adequate.

Thickness

As the verification for the maximum allowable value of c was satisfied in Section 20.6.1 of this example, a base plate thickness of 40 mm is adequate.

REFERENCES

Eurocode Parts:

All the following Parts have been published by BSI with their respective UK National Annexes.

BS EN 1990 Eurocode – Basis of structural design

BS EN 1991 Eurocode 1: Actions on structures

BS EN 1991-1-1	Part 1-1: General actions. Densities, self-weight, imposed loads for buildings
BS EN 1991-1-2	Part 1-2: General actions. Actions on structures exposed to fire
BS EN 1991-1-3	Part 1-3: General actions. Snow loads
BS EN 1991-1-4	Part 1-4: General actions. Wind actions
BS EN 1991-1-5	Part 1-5: General actions. Thermal actions
BS EN 1991-1-6	Part 1-6: General actions. Actions during execution
BS EN 1991-1-7	Part 1-7: General actions. Accidental actions

BS EN 1992 Eurocode 2: Design of concrete structures

BS EN 1992-1-1	Part 1-1: General rules and rule for buildings
BS EN 1992-1-2	Part 1-2: General rules – Structural fire design

BS EN 1993 Eurocode 3: Design of steel structures

BS EN 1993-1-1	Part 1-1: General rules and rules for buildings
BS EN 1993-1-2	Part 1-2: General rules – Structural fire design
BS EN 1993-1-3	Part 1-3: General rules – Supplementary rules for cold-formed members and sheeting
BS EN 1993-1-5	Part 1-5: Plated structural elements
BS EN 1993-1-8	Part 1-8: Design of joints
BS EN 1993-1-9	Part 1-9: Fatigue
BS EN 1993-1-10	Part 1-10: Material toughness and through-thickness properties
BS EN 1993-1-12	Part 1-12: Additional rules for the extension of BS EN 1993 up to steel grades S700

BS EN 1994 Eurocode 4: Design of composite steel and concrete structures

BS EN 1994-1-1	Part 1-1: General rules and rules for buildings
BS EN 1994-1-2	Part 1-2: General rules – Structural fire design

Product Standards

The following product standard has been published by BSI as BS EN 10025-2.

BS EN 10025-2:2004 Hot rolled products of structural steels. Part 2: Technical delivery conditions for non-alloy structural steels

SCI publications

1. Design of floors for vibration: A new approach. Revised Edition (P354)
   The Steel Construction Institute, 2009

The publications listed below are in accordance with Eurocodes and the UK National Annexes

2. Steel building design: Introduction to the Eurocodes (P361)
   SCI, 2009
3. Steel building design: Concise Eurocodes (P362),
   SCI, 2009
4. Steel building design: Design data (P363)
   SCI and BCSA, 2009
5. Steel building design: Medium-rise braced frames (P365)
   SCI, 2009
6. Steel building design: Worked examples – Hollow sections (P374)
   SCI, 2009
7. Steel building design: Fire resistance design (P375)
   SCI, 2009
8. Steel building design: Worked examples for students (P387)
   SCI, 2009
9. Joints in steel construction: Simple connections in accordance with Eurocode 3 (P358)
   SCI & BCSA, *to be published in 2010*
10. Steel building design: Composite members (P359)
    SCI, *to be published in 2010*
11. Steel building design: Stability of beams and columns (P360)
    SCI, *to be published in 2010*
12. Handbook of structural steelwork Eurocode Edition (P366)
    BCSA & SCI, *to be published in 2010*
13. Steel building design: Combined bending and torsion (P385)
    SCI, *to be published in 2010*

Published Document

The following document is published by BSI.

PD 6695-1-10 Recommendations for the design of structures to BS EN 1993-1-10
BSI, 2009

Access Steel documents

The following documents are available from www.access-steel.com.

SN002 NCCI: Determination of non-dimensional slenderness of I and H sections

SN003 NCCI: Elastic critical moment for lateral torsional buckling

SN005 NCCI: Determination of moments on columns in simple construction

SN014 NCCI: Shear resistance of a simple end plate connection

SN015 NCCI: Tying resistance of a simple end plate connection

SN017 NCCI: Shear resistance of a fin plate connection

SN018 NCCI: Tying resistance of a fin plate connection

SN020 NCCI: "Simple Construction" - concept and typical frame arrangements

SN048 NCCI: Verification of columns in simple construction – a simplified interaction criterion (GB). (*This is a localized resource for UK*)